REZNOR®

UNIT HEATER CATALOG

COMMERCIAL/INDUSTRIAL HEATERS
RESIDENTIAL GARAGE HEATERS

FUEL

- Natural Gas
- Propane
- Fuel Oil

CAPACITIES

- 25 - 1,200 MBH
- 80% - 93% Thermal Efficiency
- 380 - 16,750 CFM

AIR DELIVERY

- Propeller Fan
- Centrifugal Blower (Ductable)

Visit www.RezSpec.com for more information.

Form C-UH (Version H)

BACKGROUND

Reznor was founded in 1888 to manufacture the “Reznor” reflector heater, which used a luminous flame gas burner developed by George Reznor. This technological breakthrough was an immediate success and hastened the expansion of gas heating in residential and commercial applications. Technological development and innovation have been the hallmark of Reznor products through the years. The development of the forced air gas unit heater, the modular Thermocore® heat exchanger, and the high-efficiency, V3® Series unit heaters have kept Reznor products at the forefront of technological advances in commercial and industrial gas heating. As a result of this pioneering role in the heating, makeup air, and ventilating equipment field, the products offered today are the most advanced in engineering design to satisfy a wide variety of applications.

FACILITIES

Reznor heaters were first manufactured and sold in Mercer, Pennsylvania (70 miles north of Pittsburgh) in 1888. Over the years, the company has grown and expanded. Today, with sales worldwide, Reznor products are being manufactured at facilities throughout North America and Europe.

PRODUCT SCOPE

Well-equipped engineering laboratories for both product development and testing can be found at many of the manufacturing sites. All domestic lab sites are agency approved.

Reznor Products include a complete line of heating, makeup air and ventilating systems, using gas, oil, hot water/steam, or electric heat sources. Reznor heater catalogs are designed to aid the engineer, architect or contractor in specifying the correct equipment for all standard and special applications. Complete data is presented on unit heaters, duct furnaces, infrared heaters, makeup air systems, pre-engineered custom-designed systems, and evaporative cooling modules. Consult your local Reznor Sales Representative for further assistance in specifying Reznor Equipment for your specific application.

SERVICES

Product service requirements are handled through contractors and/or distributors, with backup from local representatives and factory-based service team. Replacement parts inventories for both warranty and non-warranty requirements are maintained at service centers throughout the country and at the manufacturing facilities.

For the Reznor Representative in your area call 800-695-1901.

REZNOR®

Thomas&Betts

REZNOR®

Unit Heater Catalog

Model UEAS

Model UDAP

Model F

Model LDAP

Contents

MODEL UEAS 2
DESCRIPTION 2
TECHNICAL DATA 3
DIMENSIONS 4
CLEARANCES 4
MODEL UDAS 5
DESCRIPTION 5
TECHNICAL DATA 6
DIMENSIONS 7
MODEL UDAP 8
DESCRIPTION 8
TECHNICAL DATA 9
DIMENSIONS 10
MODEL UDBS 11
DESCRIPTION 11
TECHNICAL DATA 12
DIMENSIONS 13
MODEL UDBP 14
DESCRIPTION 14
TECHNICAL DATA 15
DIMENSIONS 16
MODEL F 17
DESCRIPTION 17
TECHNICAL DATA 18
DIMENSIONS 19
MODEL B 20
DESCRIPTION 20
TECHNICAL DATA 21
DIMENSIONS 22
MODEL OH 23
DESCRIPTION 23
TECHNICAL DATA 24
DIMENSIONS 24
MODEL LDAP 25
DESCRIPTION 25
TECHNICAL DATA 26
DIMENSIONS 26
THROW/FLOOR COVERAGE 28
SOUND DATA 33
BLOWER CHARTS 34
MOTOR FULL LOAD AMP TABLE 36
INSTALLATION PROCEDURES 37
OPTIONS AND ACCESSORIES 39
REZNOR SEPARATED COMBUSTION SYSTEMS 43
REZNOR REZPRO® TOOLBOX SOFTWARE 44
SAMPLE SPECIFICATIONS 46
REZNOR® PRODUCT LIMITED WARRANTY 53

For installations where dirt, dust, and other air borne contamination is present in the indoor environment, it is recommended to use separated combustion units (UDAS, UDBS). These models use air from outside the space for combustion. This will help reduce the build up of contaminates on the burner which would affect the combustion process. Refer to the installation manuals for recommended frequency of maintenance and cleaning.

IMPORTANT: Specifications are subject to change without notice. This guide is intended to provide specifications and technical information only.
This guide is not intended to be an instruction manual. When installing heating and ventilating equipment, you must check and conform to all local and national building codes.
Improper installation of heating and ventilating equipment could be dangerous. Consult manufacturer's installation manual for instructions and important warnings.

REZNOR®

Model UEAS

Super High Efficiency Separated Combustion, Low Static Unit Heaters for Commercial/ Industrial Use

DESCRIPTION

Reznor® V3 Series Model UEAS gas-fired, high efficiency, separated combustion unit heaters are available in 4 sizes ranging from 131,000 to 305,000 BTUH gas input. Heaters are designed for up to 93% thermal efficiency and are approved for installation in the United States and Canada by ETL.

Reznor V3 Series unit heaters have a refreshing appearance with a glossy white cabinet finish and less visible hardware. Each size cabinet is easily suspended from 4 suspension points. The low voltage terminal strip on the outside of the cabinet makes connecting control wiring easy with no panels to remove. The addition of a "G" terminal to the low voltage strip, along with the new design of the circuit board, allows for fan only operation (without adding relays). All units have a factory installed gas line nipple to the exterior of the cabinet for easy gas service connection. The MacroChannel® secondary heat exchanger has a 1/2" PVC pipe for attaching a coupling for ease of installation and cleaning of the required condensate drain. A 4" PVC cleanout cap that is drilled and tapped for a 1/2" NPT fitting is furnished with the heater for attaching the vent condensate drain.

The preeminent new internal feature is the TCORE3® high efficiency heat exchanger and single burner combustion system. Other standard features include a single-stage gas valve, multi-try direct spark ignition with timed lockout, pressure switch to verify vent flow, venter motor, aluminum venter wheel with housing, resiliently isolated axial fan and motor assembly, a high temperature limit control, interlock door switch, and a built-in disconnect switch. Operation is controlled through an integrated circuit board. The circuit board monitors heater operation and has LED diagnostic indicator lights to identify abnormalities in control functions.

The 1ST ever separated combustion system in the commercial/industrial heating industry **was introduced on a Reznor heater** in the 1960s, and that proven technology is continued in this new separated combustion product. Model UEAS separated combustion units require installation of a specially designed combustion air/ vent system including the unique concentric adapter box that allows for only one building penetration for both the vent and combustion air.

The V3 Series unit heaters are designed to provide all the features you expect in a Reznor heater plus improved efficiency, easier installation, and a new look ***~ both inside and out.*** Look for the unique white unit with no visible front and bottom hardware, deep red louvers, black side handle, and angled corner to know you have a genuine Reznor unit by Thomas & Betts.

STANDARD FEATURES

- Up to 93% Thermal efficient
- 50-60°F temperature rise range
- Arranged for use with natural gas (propane conversion kit included with unit)
- TCORE3 titanium stabilized aluminized steel primary heat exchanger with extruded aluminum MacroChannel secondary heat exchanger (patent pending)
- Patented [A] single burner combustion system including a one-piece burner assembly
- 115/1/60 Supply voltage
- 115 Volt open fan motor with internal overload protection
- Transformer for 24-volt controls
- Integrated circuit board with diagnostic indicator lights
- Multi-try direct ignition with timed lockout
- Fan relay (included on the circuit board)
- Single-stage natural gas valve
- Vibration/noise isolated fan motor
- Sealed control compartment houses all electrical components
- 48 frame, ball bearing, PSC venter motor
- 4-point Suspension
- Built-in disconnect switch (20A @ 115V Rating)
- External terminal strip for 24-volt wiring
- Sealed junction box for supply wiring
- External gas connection
- Fully gasketed door panel with safety door switch
- Full fan guard ***~ engineered for safety***
- Improved cabinet design with less visible hardware

OPTIONAL FEATURES - FACTORY INSTALLED

- 409 stainless steel primary heat exchanger
- Totally enclosed fan motor (115 V only)

NOTE: Model UEAS should not be used in applications where space temperature is set below 45°F.

[A] U.S. Patent No. 6,889,686

ACCESSORIES - FIELD INSTALLED

- Horizontal or vertical combustion air/vent kit including concentric adapter [B]
- Thermostat
- Thermostat guard with locking cover
- Vertical louvers
- Downturn nozzle kits
- Manual shutoff valves

[B] Selection of either a horizontal or vertical combustion air/vent kit is required.

TECHNICAL DATA

Model UEAS

MODEL NUMBER		130	180	260	310
INPUT HEATING CAPACTITY	BTUH	131,000	175,000	260,000	305,000
	KW/H	38.4	51.2	76.1	89.3
THERMAL EFFICIENCY		93%	91%	92%	91%
OUTPUT HEATING CAPACITY [C]	BTUH	121,830	159,250	239,200	277,550
	KW/H	35.7	46.6	70.0	81.3
GAS CONNECTION (INCHES) [D]	NATURAL	1/2	1/2	3/4	3/4
	PROPANE	1/2	1/2	3/4	3/4
VENT CONNECTION DIAMETER (INCHES)		4	4	4	4
COMBUSTION AIR INLET DIAMETER (INCHES)		6	6	6	6
CONTROL AMPS (24 - VOLT)		1.0	1.0	1.0	1.0
FULL-LOAD AMPS (115V)		6.3	6.3	10	10
MAXIMUM OVER CURRENT PROTECTION (115V) [E]		15	15	20	20
NORMAL POWER CONSUMPTION (WATTS)		657	657	1020	1020
DISCHARGE AIR TEMPERATURE RISE (°F)		50	60	50	60
AIR VOLUME	CFM	2256	2458	4430	4283
	M^3/MINUTE	63.9	69.6	125.4	121.3
DISCHARGE AIR OPENING AREA ($FT.^2$)		2.56	2.56	4.79	4.79
OUTLET VELOCITY (FPM)	FPM	883	962	924	894
	M/MINUTE	269	293	282	272
FAN MOTOR HP [F]	STANDARD	1/4	1/4	1/2	1/2
	OPTIONAL ENCLOSED	1/4	1/4	1/2	1/2
FAN MOTOR RPM		1050	1050	1050	1050
FAN DIAMETER (IN.)		18	18	24	24
APPROXIMATE CONDENSATE PER HOUR	Gallons	1	1	2	2
	Liters	3.8	3.8	7.6	7.6
APPROXIMATE NET WEIGHT	LBS	230	245	360	395
	KG	104	111	163	179
APPROXIMATE SHIP WEIGHT	LBS	255	270	385	420
	KG	116	122	175	190

[C] Output capacities shown are for units installed at elevations up to 2,000 ft. (600M).
[D] Sizes shown are for gas connection to a single-stage gas valve, not gas supply line size.
[E] MOP = 2.25 x largest motor FLA + remaining load. Answer is rounded down to the next size of commercially available circuit breaker or fuse.
[F] All other information in this table is based on a heater equipped with standard 115 Volt open fan motor.

HOW IT WORKS

Following is a diagram showing the air flow patterns for Model UEAS. Thin arrows show air flow from combustion air intake, across the burner, through primary and secondary heat exchangers and out exhaust vent. Larger arrows show air flow across the heat exchanger to provide heat to the space.

DIMENSIONS

Model UEAS

±1/16" (2mm)

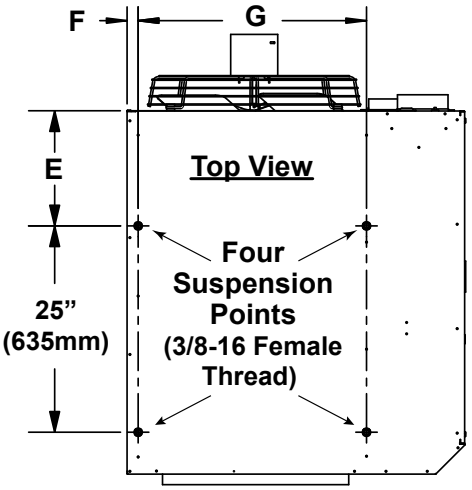

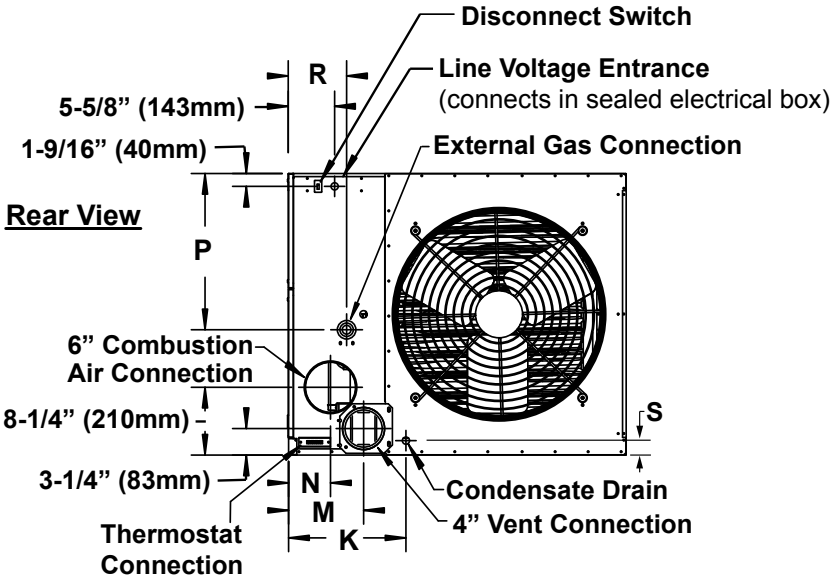

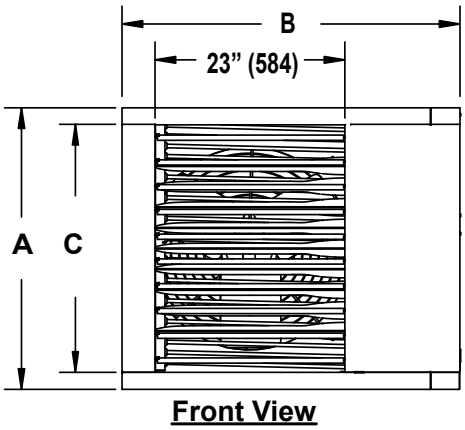

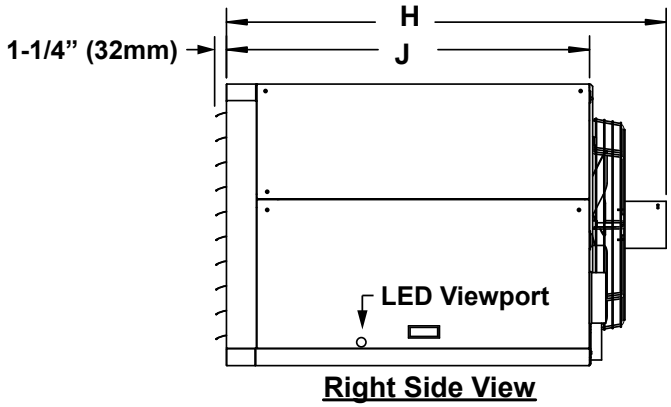

Size	A	B	C	E	F	G	H	J	K	M	N	P	R	S
Dimensions - inches (±1/8 inch)														
130, 180	20 1/8	39 3/16	16 1/16	11 15/16	2 3/8	25 11/16	50 1/2	42	13 7/16	8 5/16	4 5/16	5 1/16	6 5/16	1 3/4
260, 310	34 1/8	40 15/16	30 1/16	13 15/16	1 3/8	27 11/16	53 5/16	44	14 7/32	9 3/32	5 1/16	18 15/16	7 3/4	1 3/8
Dimensions - mm (±3 mm)														
130, 180	(511)	(995)	(408)	(303)	(60)	(652)	(1,283)	(1,067)	(341)	(211)	(110)	(129)	(160)	(44)
260, 310	(867)	(1,040)	(764)	(354)	(35)	(703)	(1,354)	(1,118)	(361)	(231)	(129)	(481)	(197)	(35)

CLEARANCES

Clearances required from combustible material unless otherwise noted.

Top		Flue Connector		Access Panel [A]		Non-Access Side		Bottom [B]		Rear [C]	
inches	(mm)	inches	(mm)	inches	(mm)	inches	(mm)	inches	(mm)	inches	(mm)
4	(102)	6	(152)	18	(457)	2	(51)	1	(25)	18	(457)

[A] Access Panel clearance required for access to controls for service.
[B] Bottom clearance to combustible. Heater should be suspended a minimum of 5 feet (1.5M) above the floor.
[C] Rear clearance required for air flow. Clearance should be measured from the fan motor.

REZNOR®

Model UDAS

Separated Combustion, Low Static Commercial/Industrial Unit Heaters

Sizes 30-125 carry an additional approval for use in residential garage/workshops under CSA International Requirement 10.96 - U.S. and CR96-0005 - Canada

CSA 2.6b

ANSI Z83.8b

DESCRIPTION

Reznor® V3 Series Model UDAS gas-fired separated combustion unit heaters are available in 14 sizes ranging from 30,000 to 400,000 BTUH gas input. All sizes are approved for commercial/industrial installations. Sizes 30-125 carry an additional approval for use in attached residential garage/workshop application. Model UDAS heaters are designed for 82-83% thermal efficiency and are approved for installation in the United States and Canada by the Canadian Standards Association (CSA).

Reznor® V3 Series unit heaters have a refreshing new appearance with a glossy white cabinet finish and less visible hardware. Each size cabinet is easily suspended from either 2 or 4 suspension points. Or, an optional hanger kit for Sizes 30-125 allows for ceiling mounting. The low voltage terminal strip on the outside of the cabinet makes connecting control wiring easy with no panels to remove. The addition of a "G" terminal to the low voltage strip, along with the new design of the circuit board, allows for fan only operation (without adding relays). All units have a factory installed gas line nipple to the exterior of the cabinet for easy gas service connection.

The preeminent new internal feature is the TCORE² ® heat exchanger and single burner combustion system. Other standard features include a single-stage gas valve, multi-try direct spark ignition with timed lockout, pressure switch to verify vent flow, resiliently isolated venter motor, venter wheel with improved housing, resiliently isolated axial fan and motor assembly, a high temperature limit control, interlock door switch, and a built-in disconnect switch. Sizes 30-125 also include a flame rollout safety switch. Operation is controlled through an integrated circuit board. The circuit board monitors heater operation and has LED diagnostic indicator lights to identify abnormalities in control functions.

The 1ST ever separated combustion system in the commercial/industrial heating industry **was introduced on a Reznor heater** in the 1960s, and that proven technology is continued in this new separated combustion product. Model UDAS separated combustion units require installation of a specially designed combustion air/vent system including the unique concentric adapter box that allows for only one building penetration for both the vent and combustion air.

The new V3 Series unit heaters are designed to provide all the features you expect in a Reznor heater plus improved efficiency, easier installation, and a new look ***~ both inside and out.*** Look for the unique white unit with no visible front and bottom hardware, deep red louvers, black side handle, and angled corner to know you have a genuine Reznor unit by Thomas & Betts.

STANDARD FEATURES

- Sizes 30-400 certified for commercial/industrial heating application
- Sizes 30-125 carry an additional approval for use in residential garage/workshop heating applications
- 82-83% Thermal efficient ***~ TOP in its class!***
- 50-60°F Rise range
- TCORE² titanium stabilized aluminized steel heat exchanger
- Patented [A] single burner combustion system including a one-piece burner assembly
- 115/1/60 Supply voltage
- 115 Volt open fan motor with internal overload protection
- Transformer for 24-volt controls
- Integrated circuit board with diagnostic indicator lights
- Multi-try direct ignition with timed lockout
- Fan relay (included on the circuit board)
- Single-stage natural gas valve (field adjustable for operation to 9,000 ft. elevation ◎)
- Vibration/noise isolated fan and venter motors
- Sealed control compartment houses all electrical components
- 2-pt ***and*** 4-pt Suspension ***~ standard on all sizes***
- Built-in disconnect switch (20A @ 115V Rating)
- External terminal strip for 24-volt wiring
- Sealed junction box for supply wiring
- External gas connection
- Fully gasketed door panel with safety door switch
- Full fan guard ***~ engineered for safety***
- Improved cabinet design with less visible hardware

[A] U.S. Patent No. 6,889,686.

OPTIONAL FEATURES - FACTORY INSTALLED

- Single-stage, propane gas valve (field adjustable for operation to 9,000 ft. elevation [B])
- Two-stage natural gas or propane gas valve - Sizes 60-400
- 409 or 316 Stainless steel heat exchangers
- Totally enclosed fan motor (Sizes 30-250, 115V only)

ACCESSORIES - FIELD INSTALLED

- Horizontal or Vertical Combustion Air/Vent Kit including concentric adapter [C]
- Thermostat
- Thermostat guard with locking cover
- Vertical louvers
- Downturn nozzle kits
- Gas conversion kits (natural and propane)
- Primary/secondary controls for zoning up to six units
- Ceiling suspension kit - Sizes 30-125
- Hanger kits for 1" pipe
- Stepdown transformer (for 208/115, 230/115 or 460/115 supply voltage)
- Manual shutoff valves

[B] Pressure switch change required for installations above 6,000 ft.
[C] Selection of either a horizontal or vertical combustion air/vent kit is required.

TECHNICAL DATA

Model UDAS

Size		30	45	60	75	100	125	150	175	200	225	250	300	350	400
Input Heating Capacity	BTUH	30,000	45,000	60,000	75,000	105,000	120,000	150,000	175,000	200,000	225,000	250,000	300,000	350,000	400,000
	(kw/h)	(8.8)	(13.2)	(17.6)	(22.0)	(30.8)	(35.2)	(44.0)	(51.3)	(58.6)	(65.9)	(73.3)	(87.9)	(102.6)	(117.2)
Thermal Efficiency (%)		82	83	83	83	83	83	83	83	83	83	83	83	83	83
Output Heating Capacity [D]	BTUH	24,600	37,350	49,800	62,250	87,150	99,600	124,500	145,250	166,000	186,750	207,500	249,000	290,500	332,000
	(kw/h)	(7.2)	(10.9)	(14.6)	(18.2)	(25.5)	(29.2)	(36.5)	(42.6)	(48.7)	(54.7)	(60.8)	(73.0)	(85.1)	(97.3)
Gas Connection (inches) [E]	Natural	1/2	1/2	1/2	1/2	1/2	1/2	1/2	1/2	1/2	3/4	3/4	3/4	3/4	3/4
	Propane	1/2	1/2	1/2	1/2	1/2	1/2	1/2	1/2	1/2	3/4	3/4	3/4	3/4	3/4
Vent Connection [F] (inches diameter)		4	4	4	4	4	4	5	5	5	5	5	6	6	6
Combustion Air Inlet [F] (inches diameter)		4	4	4	4	4	4	6	6	6	6	6	6	6	6
Control Amps (24 volt)		1.0	1.0	1.0	1.0	1.0	1.0	1.0	1.0	1.0	1.0	1.0	1.0	1.0	1.0
Full Load Amps (115 volt)		1.9	2.4	2.4	3.3	3.9	5.1	3.8	3.8	4.6	7.5	7.5	11.0	11.0	11.0
Maximum Over Current Protection (115V) [G]		15	15	15	15	15	15	15	15	15	15	15	20	20	20
Normal Power Consumption (watts)		109	155	155	217	276	354	392	392	491	747	747	1086	1086	1086
Discharge Air Temperature Rise (°F)		50	55	60	60	60	60	60	60	60	60	60	60	60	60
Air Volume	CFM	456	629	769	961	1345	1537	1921	2242	2562	2882	3202	3843	4483	5123
	(M^3/min)	(12.9)	(17.8)	(21.8)	(27.2)	(38.1)	(43.5)	(54.4)	(63.5)	(72.5)	(81.6)	(90.7)	(108.8)	(126.9)	(145.1)
Discharge Air Opening Area	ft^2	0.96	0.96	1.25	1.25	2.01	2.01	2.56	2.56	2.56	3.51	3.51	4.79	4.79	4.79
	(M^2)	(0.09)	(0.09)	(0.12)	(0.12)	(0.19)	(0.19)	(0.24)	(0.24)	(0.24)	(0.33)	(0.33)	(0.45)	(0.45)	(0.45)
Output Velocity	FPM	475	656	616	770	668	763	752	877	1003	820	911	802	936	1069
	(M/min)	(145)	(200)	(188)	(235)	(204)	(233)	(229)	(267)	(306)	(250)	(278)	(244)	(285)	(326)
Fan Motor HP [H]	Open	0.02	0.03	0.03	0.06	1/30	1/20	1/6	1/6	1/6	1/4	1/4	1/2	1/2	1/2
	Enclosed	0.06	0.06	0.06	0.06	1/4	1/4	1/4	1/4	1/4	1/4	1/4	1/2	1/2	1/2
Fan Motor	RPM	1550	1550	1550	1550	1050	1050	1050	1050	1050	1050	1050	1050	1050	1050
Fan Diameter	inches	10	10	12	12	16	16	18	18	18	20	20	24	24	24
Sound Level	dba @ 15 ft	40	40	40	49	54	55	51	52	53	56	56	59	61	62
Approximate Net Weight	lbs	55	60	68	73	97	102	173	188	188	204	216	270	295	307
	(kg)	(25)	(27)	(31)	(33)	(44)	(46)	(78)	(85)	(85)	(93)	(98)	(122)	(134)	(139)
Approximate Ship Weight	lbs	63	68	76	81	120	125	206	221	221	247	259	323	348	360
	(kg)	(29)	(31)	(34)	(37)	(54)	(57)	(93)	(100)	(100)	(112)	(117)	(147)	(158)	(163)

[D] CSA rating for altitudes to 2000 ft.
[E] Size shown is for gas connection to a single stage gas valve, not supply line size.
[F] Smaller and/or larger vent and combustion air pipe diameters may be allowed; refer to the Venting Installation Manual for Separated Combustion Units, Form I-V-SC. If vent diameter is different from vent connection, reducer/enlargers will be field-required.
[G] MOP = 2.25 x largest motor FLA + remaining load. Answer is rounded down to the next size of commercially available circuit breaker or fuse.
[H] All other information in this table is based on a heater equipped with a standard 115 volt open fan motor.

For installations where dirt, dust, and other air borne contamination is present in the indoor environment, it is recommended to use separated combustion units (Model UDAS). These models use air from outside the space for combustion. This will help reduce the build up of contaminates on the burner which would affect the combustion process. Refer to the installation manuals for recommended frequency of maintenance and cleaning.

DIMENSIONS

Model UDAS ±1/16" (2mm)

Size	A	B	C	D	E	F	G	H	J	K	M	N	P	Q	R	S	T
30, 45	12 1/8	26 5/8	10	13 13/16	26	21 9/16	5 3/16	6 1/2	2 11/16	3 7/8	17 3/8	11/16	4 5/16	13	9 9/16	2 15/16	2 15/16
60	15 1/8	26 5/8	13	13 13/16	27	21 9/16	7 7/8	6 1/2	5 1/2	3 7/8	17 3/8	11/16	4 5/16	13	10 1/2	3 1/4	2 15/16
75	15 1/8	26 5/8	13	13 13/16	27 5/8	21 9/16	7 7/8	6 1/2	5 1/2	3 7/8	17 3/8	11/16	4 5/16	13	10 1/2	3 1/4	2 15/16
100	23 1/8	26 5/8	21	13 13/16	28 5/8	21 9/16	14 1/2	6 1/2	8 3/4	3 7/8	17 3/8	11/16	4 5/16	13	10 1/2	4 5/8	2 15/16
125	23 1/8	26 5/8	21	13 13/16	29 3/8	21 9/16	14 1/2	6 1/2	8 3/4	3 7/8	17 3/8	11/16	4 5/16	13	10 1/2	4 5/8	2 15/16
150, 175, 200	20 1/8	38 3/16	16	23	42	35 3/8	8 1/2	8 1/4	5 7/16	6 1/2	25 11/16	1 3/8	8 3/16	22 3/16	16 3/8	4 1/8	8 5/16
225, 250	26 1/8	38 3/16	22	23	42	35 3/8	13 1/16	8 13/16	9	6 1/2	25 11/16	1 3/8	8 3/16	22 3/16	15 5/8	5 9/16	8 5/16
300, 350, 400	34 1/8	41	30	23	42	35 3/8	17 1/16	9	11 13/16	7 5/16	27 11/16	1 3/8	8 3/16	22 3/16	16 3/16	9 1/16	8 9/16

Size	A	B	C	D	E	F	G	H	J	K	M	N	P	Q	R	S	T
30, 45	(308)	(676)	(254)	(351)	(660)	(548)	(132)	(165)	(68)	(98)	(441)	(17)	(110)	(330)	(243)	(75)	(75)
60	(384)	(676)	(330)	(351)	(686)	(548)	(200)	(165)	(140)	(98)	(441)	(17)	(110)	(330)	(267)	(83)	(75)
75	(384)	(676)	(330)	(351)	(702)	(548)	(200)	(165)	(140)	(98)	(441)	(17)	(110)	(330)	(267)	(83)	(75)
100	(587)	(676)	(533)	(351)	(727)	(548)	(368)	(165)	(222)	(98)	(441)	(17)	(110)	(330)	(267)	(117)	(75)
125	(587)	(676)	(533)	(351)	(746)	(548)	(368)	(165)	(222)	(98)	(441)	(17)	(110)	(330)	(267)	(117)	(75)
150, 175, 200	(511)	(970)	(406)	(584)	(1,067)	(899)	(216)	(210)	(138)	(165)	(652)	(35)	(208)	(564)	(416)	(105)	(211)
225, 250	(664)	(970)	(559)	(584)	(1,067)	(899)	(332)	(224)	(229)	(165)	(652)	(35)	(208)	(564)	(397)	(141)	(211)
300, 350, 400	(867)	(1,041)	(762)	(584)	(1,067)	(899)	(433)	(229)	(300)	(186)	(703)	(35)	(208)	(564)	(411)	(230)	(217)

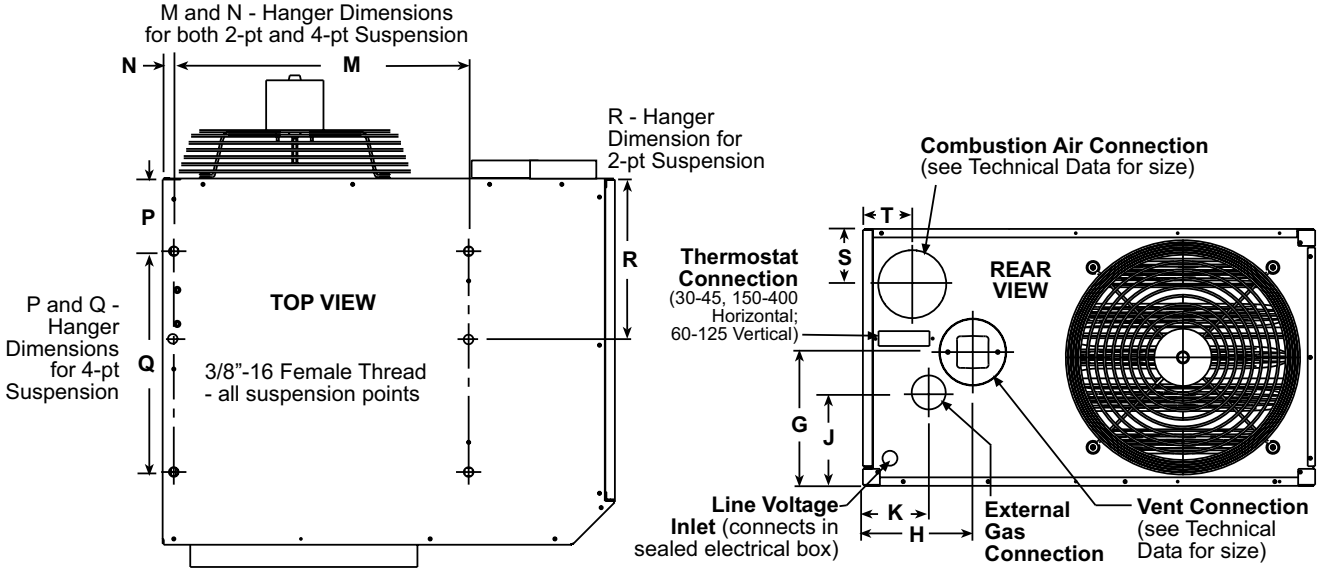

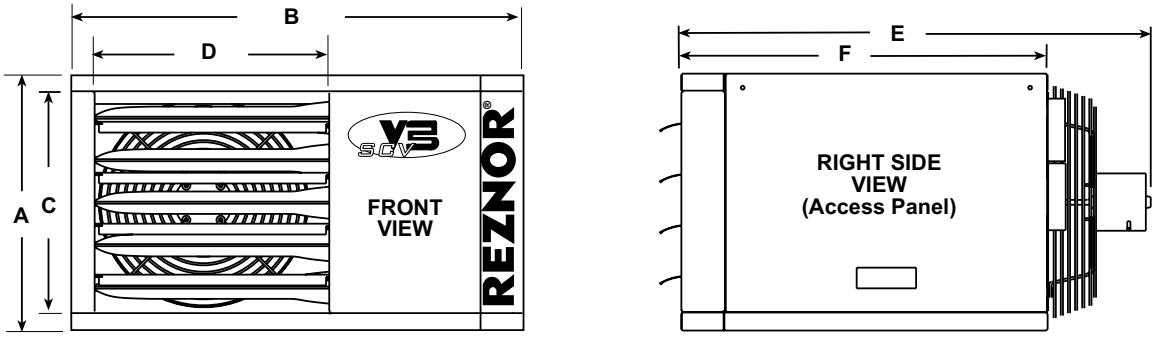

CLEARANCE FROM COMBUSTIBLES

Size	Top		Flue Connector		Access Panel [J]		Non-Access Side		Bottom [K]		Rear [L]	
	inches	mm	inches	mm	inches	mm	inches	mm	inches	mm	inches	mm
30-125	1	25	6	152	18	457	1	25	1	25	18	457
150-400	4	102	6	152	18	457	2	51	1	25	18	457

[J] Access Panel clearance is required for service clearance to controls
[K] Suspend the heater so that the bottom is a minimum of 5' (1.5M) above the floor.
[L] Rear clearance is required for air movement. Rear clearance should be measured from the fan motor.
Refer to Reznor web site www.RezSpec.com for venting/inlet air requirements for Reznor Separated Combustion Units

REZNOR®

Model UDAP

Power Vented, Low Static Axial Fan Commercial/Industrial Unit Heaters

Sizes 30-125 carry an additional approval for use in residential garage/workshops under CSA International Requirement 10.96 - U.S. and CR96-0005 - Canada

CSA 2.6b

ANSI Z83.8b

DESCRIPTION

Reznor® V3 Series Model UDAP gas-fired unit heaters are available in 14 sizes ranging from 30,000 to 400,000 BTUH gas input. All sizes are approved for commercial/industrial installations. Sizes 30-125 carry an additional approval for use in attached residential garage/workshop application. Model UDAP heaters are designed for 82-83% thermal efficiency and are approved for installation in the United States and Canada by the Canadian Standards Association (CSA).

Reznor V3 Series unit heaters have a refreshing new appearance with a glossy white cabinet finish and less visible hardware. Each size cabinet is easily suspended from either 2 or 4 suspension points. Or, an optional hanger kit for Sizes 30-125 allows for ceiling mounting. The low voltage terminal strip on the outside of the cabinet makes connecting control wiring easy with no panels to remove. The addition of a "G" terminal to the strip, along with the new design of the circuit board, allows for fan only operation (without adding relays). All units have a factory installed gas line nipple to the exterior of the cabinet for easy gas service connection.

The preeminent new internal feature is the TCORE² heat exchanger and single burner combustion system. Other standard features include a single-stage gas valve, multi-try direct spark ignition with timed lockout, pressure switch to verify vent flow, resiliently isolated venter motor, venter wheel with improved housing, resiliently isolated axial fan and motor assembly, and a high temperature limit control. Sizes 30-125 also include a flame rollout safety switch. Operation is controlled through an integrated circuit board. The circuit board monitors heater operation and has LED diagnostic indicator lights to identify abnormalities in control functions.

The V3 Series unit heaters are designed to provide all the features you expect in a Reznor heater plus improved efficiency, easier installation, and a new look ***~ both inside and out.*** Look for the unique white unit with no visible front and bottom hardware, deep red louvers, black side handle, and angled corner to know you have a genuine Reznor unit by Thomas & Betts.

STANDARD FEATURES

- Sizes 30-400 certified for commercial/industrial heating application
- Sizes 30-125 carry an additional approval for use in residential garage/workshop heating applications
- 82-83% Thermal efficient ***~ TOP in its class!***
- 50-60°F Rise range
- TCORE² titanium stabilized aluminized steel heat exchanger
- Patented [A] single burner combustion system including a one-piece burner assembly
- 115/1/60 Supply voltage
- 115 Volt open fan motor with internal overload protection
- Transformer for 24-volt controls
- Integrated circuit board with diagnostic indicator lights
- Multi-try direct spark ignition with timed lockout
- Fan relay (included on the circuit board)
- Single-stage natural gas valve (field adjustable for operation to 9,000 ft. elevation [B])
- Vibration/noise isolated fan and venter motors ***~ designed for low noise operation***
- 2-pt ***and*** 4-pt Suspension ***~ standard on all sizes***
- External terminal strip for 24-volt wiring
- External gas connection
- Full fan guard ***~ engineered for safety***
- Improved cabinet design with less visible hardware

OPTIONAL FEATURES - FACTORY INSTALLED

- Single-stage, propane gas valve (field adjustable for operation to 9,000 ft. elevation [B])
- Two-stage natural gas or propane gas valve - Sizes 60-400
- 409 or 316 Stainless steel heat exchangers
- Totally enclosed fan motor (Sizes 30-250, 115V only)
- Common venting with other gravity vented Category I appliance(s) (Sizes 30-100)

[A] U.S. Patent No. 6,889,686.
[B] Pressure switch change required for installations above 6,000 ft.

OPTIONAL FEATURES - FIELD INSTALLED

- Vent cap
- Thermostat
- Thermostat guard with locking cover
- Vertical louvers
- Downturn nozzle kits
- Gas conversion kits (natural and propane)
- Primary/secondary controls for zoning up to six units
- Ceiling suspension kit - Sizes 30-125
- Hanger kits for 1" pipe
- Stepdown transformer (for 208/115, 230/115 or 460/115 supply voltage)
- Manual shutoff valves

TECHNICAL DATA

Model UDAP

Size		30	45	60	75	100	125	150	175	200	225	250	300	350	400
Input Heating Capacity	BTUH	30,000	45,000	60,000	75,000	105,000	120,000	150,000	175,000	200,000	225,000	250,000	300,000	350,000	400,000
	kw/h	8.8	13.2	17.6	22.0	30.8	35.2	43.9	51.2	58.6	65.9	73.2	87.8	102.5	117.1
Thermal Efficiency (%)		82	83	83	83	83	83	83	83	83	83	83	83	83	83
Output Heating Capacity [C]	BTUH	24,600	37,350	49,800	62,250	87,150	99,600	124,500	145,250	166,000	186,750	207,500	249,000	290,500	332,000
	kw/h	7.2	11.0	14.6	18.3	25.6	29.2	36.4	42.5	48.6	54.7	60.8	72.9	85.1	97.2
Gas Connection (inches) [D]	Natural	1/2	1/2	1/2	1/2	1/2	1/2	1/2	1/2	1/2	3/4	3/4	3/4	3/4	3/4
	Propane	1/2	1/2	1/2	1/2	1/2	1/2	1/2	1/2	1/2	3/4	3/4	3/4	3/4	3/4
Vent Connection Size [E] (inches diameter)		4	4	4	4	4	4	5	5	5	5	5	6	6	6
Control Amps (24 volt)		1.0	1.0	1.0	1.0	1.0	1.0	1.0	1.0	1.0	1.0	1.0	1.0	1.0	1.0
Full Load Amps (115 volt)		1.9	2.4	2.4	3.3	3.9	5.1	3.8	3.8	4.6	7.5	7.5	11.0	11.0	11.0
Maximum Over Current Protection (115V) [F]		15	15	15	15	15	15	15	15	15	15	15	20	20	20
Normal Power Consumption (watts)		109	155	155	217	276	354	392	392	491	747	747	1086	1086	1086
Discharge Air Temperature Rise (°F)		50	55	60	60	60	60	60	60	60	60	60	60	60	60
Air Volume	CFM	456	629	769	961	1345	1537	1921	2242	2562	2882	3202	3843	4483	5123
	M^3/minute	12.9	17.8	21.8	27.5	36.7	45.9	54.4	63.5	72.5	81.6	90.7	108.8	126.9	145.1
Discharge Air Opening Area	ft^2	0.96	0.96	1.25	1.25	2.01	2.01	2.56	2.56	2.56	3.51	3.51	4.79	4.79	4.79
	M^2	0.09	0.09	0.12	0.12	0.19	0.19	0.24	0.24	0.24	0.33	0.33	0.45	0.45	0.45
Output Velocity	FPM	475	656	616	770	668	763	752	877	1003	820	911	802	936	1069
	M/minute	145	200	188	238	196	245	229	267	306	250	278	244	285	326
Fan Motor HP [G]	Open	0.02	0.03	0.03	0.06	1/30	1/20	1/6	1/6	1/6	1/4	1/4	1/2	1/2	1/2
	Enclosed	0.06	0.06	0.06	0.06	1/4	1/4	1/4	1/4	1/4	1/4	1/4	1/2	1/2	1/2
Fan Motor RPM		1550	1550	1550	1550	1050	1050	1050	1050	1050	1050	1050	1050	1050	1050
Fan Diameter (inches)		10	10	12	12	16	16	18	18	18	20	20	24	24	24
Sound Level	dba @ 15 ft	40	40	40	49	54	55	51	52	53	56	56	59	61	62
Approximate Net Weight	lbs	54	59	67	72	96	101	172	187	187	203	215	269	294	306
	kg	24	27	30	33	44	46	78	85	85	92	98	122	133	139
Approximate Ship Weight	lbs	61	66	74	79	118	123	204	219	219	245	257	321	346	358
	kg	27	30	33	36	54	56	93	100	100	111	117	146	157	163

[C] CSA rating for altitudes to 2000 ft.
[D] Size shown is for gas connection to a single stage gas valve, not supply line size.
[E] Smaller or larger vent pipe diameters may be allowed; refer to the Venting Installation Manual, Form I-V-PV. If vent diameter is different from vent connection, reducer/enlargers will be field-required.
[F] MOP = 2.25 x largest motor FLA + remaining load. Answer is rounded down to the next size of commercially available circuit breaker or fuse.
[G] All other information in this table is based on a heater equipped with a standard 115 volt open fan motor.

For installations where dirt, dust, and other air borne contamination is present in the indoor environment, it is recommended to use separated combustion units (Model UDAS). These models use air from outside the space for combustion. This will help reduce the build up of contaminates on the burner which would affect the combustion process. Refer to the installation manuals for recommended frequency of maintenance and cleaning.

DIMENSIONS

Model UDAP

±1/16" (2mm)

Size	A	B	C	D	E	F	G	H	J	K	M	N	P	Q	R
30, 45	12 1/8	25 5/8	10	13 13/16	26	21 9/16	5 3/16	6 1/2	2 11/16	3 7/8	17 3/8	11/16	4 5/16	13	9 9/16
60	15 1/8	25 5/8	13	13 13/16	27	21 9/16	7 7/8	6 1/2	5 1/2	3 7/8	17 3/8	11/16	4 5/16	13	10 1/2
75	15 1/8	25 5/8	13	13 13/16	27 5/8	21 9/16	7 7/8	6 1/2	5 1/2	3 7/8	17 3/8	11/16	4 5/16	13	10 1/2
100	23 1/8	25 5/8	21	13 13/16	28 5/8	21 9/16	14 1/2	6 1/2	8 3/4	3 7/8	17 3/8	11/16	4 5/16	13	10 1/2
125	23 1/8	25 5/8	21	13 13/16	29 3/8	21 9/16	14 1/2	6 1/2	8 3/4	3 7/8	17 3/8	11/16	4 5/16	13	10 1/2
150, 175, 200	20 1/8	38 3/16	16	23	42	35 3/8	8 1/2	8 1/4	5 7/16	6 1/2	25 11/16	1 3/8	8 3/16	22 3/16	16 3/8
225, 250	26 1/8	38 3/16	22	23	42	35 3/8	13 1/16	8 13/16	9	6 1/2	25 11/16	1 3/8	8 3/16	22 3/16	15 5/8
300, 350, 400	34 1/8	41	30	23	42	35 3/8	17 1/16	9	11 13/16	7 5/16	27 11/16	1 3/8	8 3/16	22 3/16	16 3/16
Size	**A**	**B**	**C**	**D**	**E**	**F**	**G**	**H**	**J**	**K**	**M**	**N**	**P**	**Q**	**R**
30, 45	(308)	(651)	(254)	(351)	(660)	(548)	(132)	(165)	(68)	(98)	(441)	(17)	(110)	(330)	(243)
60	(384)	(651)	(330)	(351)	(686)	(548)	(200)	(165)	(140)	(98)	(441)	(17)	(110)	(330)	(267)
75	(384)	(651)	(330)	(351)	(702)	(548)	(200)	(165)	(140)	(98)	(441)	(17)	(110)	(330)	(267)
100	(587)	(651)	(533)	(351)	(727)	(548)	(368)	(165)	(222)	(98)	(441)	(17)	(110)	(330)	(267)
125	(587)	(651)	(533)	(351)	(746)	(548)	(368)	(165)	(222)	(98)	(441)	(17)	(110)	(330)	(267)
150, 175, 200	(511)	(970)	(406)	(584)	(1,067)	(899)	(216)	(210)	(138)	(165)	(652)	(35)	(208)	(564)	(416)
225, 250	(664)	(970)	(559)	(584)	(1,067)	(899)	(332)	(224)	(229)	(165)	(652)	(35)	(208)	(564)	(397)
300, 350, 400	(867)	(1,041)	(762)	(584)	(1,067)	(899)	(433)	(229)	(300)	(186)	(703)	(35)	(208)	(564)	(411)

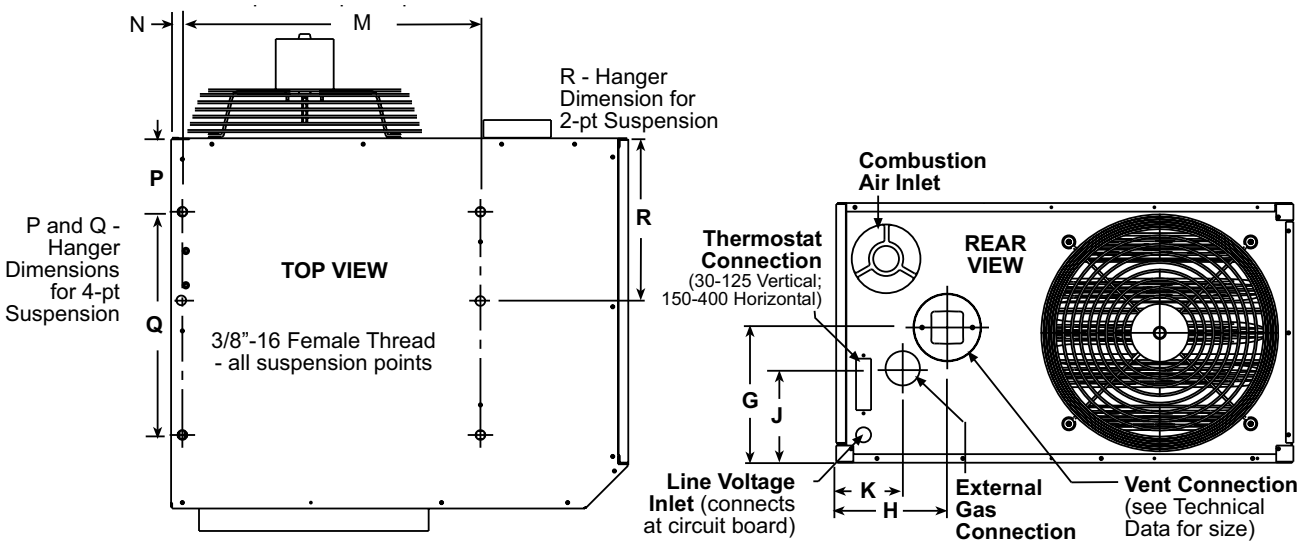

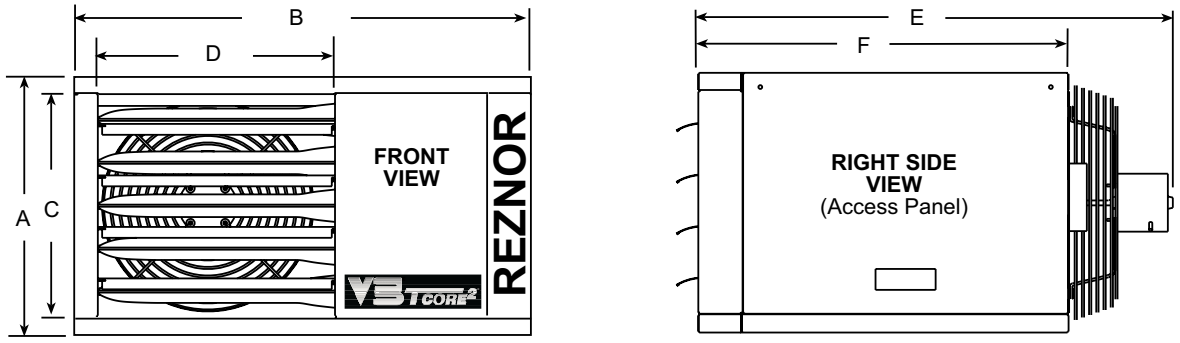

CLEARANCES FROM COMBUSTIBLES

	Top		Flue Connector		Access Panel [J]		Non-Access Side		Bottom [K]		Rear [L]	
Size	inches	mm	inches	mm	inches	mm	inches	mm	inches	mm	inches	mm
30-125	1	25	6	152	18	457	1	25	1	25	18	457
150-400	4	102	6	152	18	457	2	51	1	25	18	457

[J] Access Panel clearance is required for service clearance to controls
[K] Suspend the heater so that the bottom is a minimum of 5' (1.5M) above the floor.
[L] Rear clearance is required for air movement. Rear clearance should be measured from the fan motor.

REZNOR®
Model UDBS

Separated Combustion, High Static Blower Type Unit Heaters for Commercial/Industrial Use

CSA 2.6b

ANSI Z83.8b

DESCRIPTION

Reznor® V3 Series Model UDBS gas-fired separated combustion unit heaters are available in 14 sizes ranging from 30,000 to 400,000 BTUH gas input. Model UDBS heaters are designed for 82-83% thermal efficiency and are approved for commercial/industrial installations in the United States and Canada by the Canadian Standards Association (CSA).

Reznor V3 Series unit heaters have a refreshing new appearance with a glossy white cabinet finish and less visible hardware. Each size cabinet is easily suspended from four suspension points. The low voltage terminal strip on the outside of the cabinet makes connecting control wiring easy with no panels to remove. The addition of a "G" terminal to the low voltage strip, along with the new design of the circuit board, allows for blower only operation (without adding relays). All units have a factory installed gas line nipple to the exterior of the cabinet for easy gas service connection.

The preeminent new internal feature is the TCORE² heat exchanger and single burner combustion system. Other standard features include a single-stage gas valve, multi-try direct spark ignition with timed lockout, pressure switch to verify vent flow, resiliently isolated venter motor, venter wheel with improved housing, a high temperature limit control, interlock door switch, and a built-in disconnect switch. Sizes 30-125 are equipped with a centrifugal blower and direct drive motor with multispeed taps. Sizes 30 and 45 are capable of handling up to .5" w.c. of external static pressure; Sizes 60-125 will handle up to .75" w.c. of external static pressure. Sizes 150-400 are equipped with a centrifugal blower with an adjustable belt drive and motor. All units are designed for use with optional 30° and 60° downturn nozzles with horizontal and vertical louvers. Operation is controlled through an integrated circuit board. The circuit board monitors heater operation and has LED diagnostic indicator lights to identify abnormalities in control functions.

The 1ST ever separated combustion system in the commercial/industrial heating industry **was introduced on a Reznor heater** in the 1960s, and that proven technology is continued in this new separated combustion product. Model UDBS separated combustion units require installation of a specially designed combustion air/vent system including the unique concentric adapter box that allows for only one building penetration for both the vent and combustion air.

The V3 Series unit heaters are designed to provide all the features you expect in a Reznor heater plus improved efficiency, easier installation, and a new look ***~ both inside and out.*** Look for the unique white unit with no visible front and bottom hardware, deep red louvers, black side handle, and angled corner to know you have a genuine Reznor unit by Thomas & Betts.

STANDARD FEATURES

- Certified for commercial/industrial heating applications
- 82-83% Thermal efficient ***~ TOP in its class!***
- 45-75°F Rise range - Sizes 30-350 50-80°F Rise range - Size 400
- TCORE² titanium stabilized aluminized steel heat exchanger
- Patented [A] single burner combustion system including a one-piece burner assembly
- 115/1/60 Supply voltage
- 115 Volt open dripproof blower motor with internal overload protection - Sizes 30-125
- 115 Volt open dripproof blower motor with internal overloads and definite purpose motor contactor - Sizes 150-400
- Direct drive blower with multispeed taps - Sizes 30-125
- Adjustable belt drive blower - Sizes 150-400
- Transformer for 24-volt controls
- Integrated circuit board with diagnostic indicator lights
- Blower relay (included on the circuit board)
- Multi-try direct spark ignition with timed lockout
- Single-stage natural gas valve (field adjustable for operation to 9,000 ft. elevation ◎)
- Vibration/noise isolated venter motors
- Sealed compartment houses all electrical components
- 4-pt Suspension
- Built-in disconnect switch - Sizes 30-125, 20A@115V rating; Sizes 150-400 30A@115V rating
- External terminal strip for 24-volt wiring
- Sealed junction box for supply wiring
- External gas connection
- Fully gasketed door panel with safety door switch
- Improved cabinet design with less visible hardware

[A] U.S. Patent No. 6,889,686

OPTIONAL FEATURES - FACTORY INSTALLED

- Equipped for propane gas
- Single-stage, propane gas valve (field adjustable for operation to 9,000 ft. elevation [B])
- Two-stage natural gas or propane gas valve - Sizes 60-400
- 409 or 316 Stainless steel heat exchanger
- 208, 230, 480, and 575 Three phase voltage - Sizes 150-400 (step down transformer shipped separate for field installation for 480 and 575 units)
- Adjustable belt drive and motor for up to .5" w.c. external static pressure - Sizes 150-400
- Totally enclosed blower motor - Sizes 150-250
- Belt and blower guards

OPTIONAL FEATURES - FIELD INSTALLED

- Horizontal or Vertical Combustion Air/Vent Kit including concentric adapter [C]
- Thermostat
- Thermostat guard with locking cover
- Vertical louvers
- Downturn nozzle (30° or 60° deflection, with and without vertical louvers)
- Gas conversion kits
- Manual shutoff valves
- High altitude kits (above 6,000 ft. to 9,000 ft.)
- Primary/secondary controls for zoning up to six units
- Duct flange
- Polytube adapters
- Blower and belt guards
- Hanger kits for 1" pipe
- Stepdown transformer (for 208/115, 230/115 or 460/115 supply voltage) - Sizes 30-125

[B] Pressure switch change required for installations above 6,000 ft.
[C] Selection of either a horizontal or vertical combustion air/vent kit is required.

For installations where dirt, dust, and other air borne contamination is present in the indoor environment, it is recommended to use separated combustion units (Model UDBS). These models use air from outside the space for combustion. This will help reduce the build up of contaminates on the burner which would affect the combustion process. Refer to the installation manuals for recommended frequency of maintenance and cleaning.

TECHNICAL DATA

Model UDBS

Size		30	45	60	75	100	125	150	175	200	225	250	300	350	400
Input Heating Capacity	BTUH	30,000	45,000	60,000	75,000	105,000	120,000	150,000	175,000	200,000	225,000	250,000	300,000	350,000	400,000
	kw/h	8.8	13.2	17.6	22.0	30.8	35.2	43.9	51.2	58.6	65.9	73.2	87.8	102.5	117.1
Thermal Efficiency (%)		82	82	82	82	83	83	83	83	83	83	83	83	83	82
Output Heating Capacity [D]	BTUH	24,600	36,900	49,200	61,500	87,150	99,600	124,500	145,250	166,000	186,750	207,500	249,000	290,500	328,000
	kw/h	7.2	10.8	14.4	18.0	25.6	29.2	36.4	42.5	48.6	54.7	60.8	72.9	85.1	96.0
Gas Connection (in.) [E]	Natural	1/2	1/2	1/2	1/2	1/2	1/2	1/2	1/2	1/2	3/4	3/4	3/4	3/4	3/4
	Propane	1/2	1/2	1/2	1/2	1/2	1/2	1/2	1/2	1/2	3/4	3/4	3/4	3/4	3/4
Vent Connection [F] (in. diameter)		4	4	4	4	4	4	5	5	5	5	5	6	6	6
Combustion Air Inlet [F] (in. diameter)		4	4	4	4	4	4	6	6	6	6	6	6	6	6
Control Amps (24 volt)		1.0	1.0	1.0	1.0	1.0	1.0	1.0	1.0	1.0	1.0	1.0	1.0	1.0	1.0
FLA (with standard HP 115V motor)		3.7	3.7	7.1	7.1	13.0	13.0	5.9	6.3	10.5	12.7	12.7	17.7	27.3	27.3
Maximum OCP (115V) [G]		15	15	15	15	30	30	15	15	25	30	30	40	60	60
Normal Power Consumption (watts @ full load, medium speed)		215	215	447	447	537	537	230	415	485	675	675	1260	1635	1635
Minimum Discharge Air Temperature Rise	°F	45	45	45	45	45	45	45	45	45	45	45	45	45	50
Maximum Discharge Air Temperature Rise	°F	75	75	75	75	75	75	75	75	75	75	75	75	75	80
Maximum Air Volume	CFM	506	759	1012	1265	1793	2049	2562	2989	3416	3843	4270	5123	5977	6185
	M^3/min	14.3	21.5	28.7	35.8	50.8	58.0	72.5	84.6	96.7	108.8	120.9	145.1	169.2	175.1
Minimum Air Volume	CFM	304	456	607	759	1076	1230	1537	1793	2049	2306	2562	3074	3586	4100
	M^3/min	8.6	12.9	17.2	21.5	30.5	34.8	43.5	50.8	58.0	65.3	72.5	87.0	101.5	116.1
Discharge Air Opening Area	Ft^2	0.96	0.96	1.25	1.25	2.01	2.01	2.56	2.56	2.56	3.51	3.51	4.79	4.79	4.79
	M^2	0.09	0.09	0.12	0.12	0.19	0.19	0.24	0.24	0.24	0.33	0.33	0.45	0.45	0.45
Maximum Output Velocity	FPM	527	791	810	1012	892	1020	1001	1168	1334	1095	1217	1070	1248	1291
	M^3/min	159	239	239	299	267	305	305	356	407	334	371	326	380	393
Minimum Output Velocity	FPM	316	475	486	607	535	612	600	700	800	657	730	642	749	856
	M^3/min	96	143	143	179	160	183	183	213	244	200	223	196	228	261
Standard Blower Motor HP		1/6	1/6	1/3	1/3	3/4	3/4	1/4	1/2	1/2	3/4	3/4	1-1/2	2	2
Blower Size	inches	9 X 6	9 X 6	9 X 6	9 X 6	10 X 10	10 X 10	12 x 12	12 x 12	12 x 12	15 x 11	15 x 11	15 x 15	15 x 15	15 x 15
Approximate Net Weight	lbs	72	77	89	94	131	136	255	275	275	320	335	375	410	425
	kg	33	35	40	43	59	62	116	125	125	145	152	170	186	193
Approximate Ship Weight	lbs	90	95	110	115	176	181	315	335	335	400	415	475	510	525
	kg	41	43	50	52	80	82	143	152	152	181	188	215	231	238

[D] CSA rating for altitudes to 2000 ft.
[E] Size shown is for gas connection to a single stage gas valve, not supply line size.
[F] Smaller and/or larger vent and combustion air pipe diameters may be allowed; refer to the Venting Installation Manual for Separated Combustion Units, Form I-UD-V-SC. If vent diameter is different from vent connection, reducer/enlargers will be field-required.
[G] MOP = 2.25 x largest motor FLA + remaining load. Answer is rounded down to the next size of commercially available circuit breaker or fuse.

DIMENSIONS

Model UDBS

±1/16" (2mm)

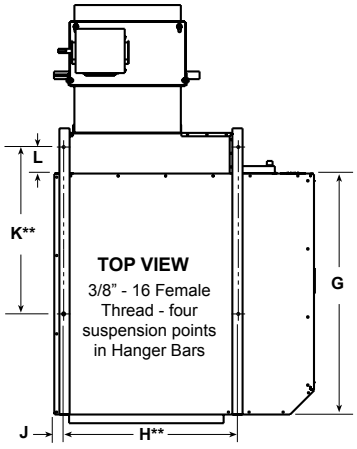

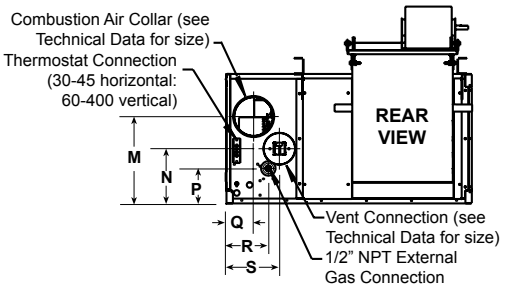

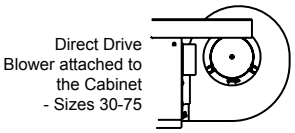

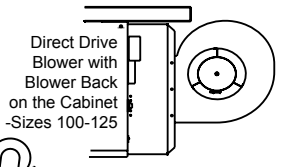

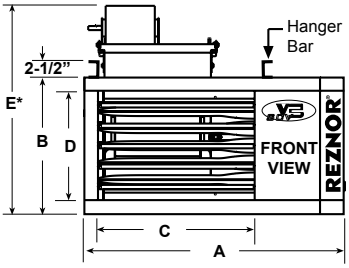

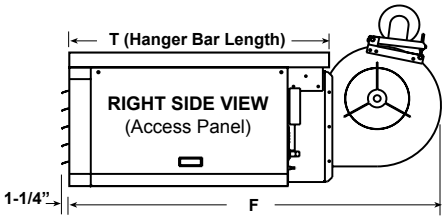

Belt Drive Blower with Blower Back on the Cabinet - Sizes 150-400

Size	A	B	C	D	E*	F	G	H**	J	K**	L	M	N	P	Q	R	S	T
30, 45	26 5/8	12 1/8	13 13/16	10	16 3/8	36 1/8	21 9/16	17 3/8	11/16	22 1/2	6 1/2	9 3/16	5 3/16	2 11/16	2 7/8	3 7/8	6 1/2	31
60	26 5/8	15 1/8	13 13/16	13	17 7/8	36 1/8	21 9/16	17 3/8	11/16	22 1/2	6 1/2	11 7/8	7 7/8	5 1/2	2 7/8	3 7/8	6 1/2	31
75	26 5/8	15 1/8	13 13/16	13	17 7/8	36 1/8	21 9/16	17 3/8	11/16	22 1/2	5 1/2	11 7/8	7 7/8	5 1/2	2 7/8	3 7/8	6 1/2	31
100	26 5/8	23 1/8	13 13/16	21	23 1/4	43 5/8	21 9/16	17 3/8	11/16	22 1/2	8 1/2	18 1/2	14 1/2	8 3/4	2 7/8	3 7/8	6 7/16	31
125	26 5/8	23 1/8	13 13/16	21	23 1/4	43 5/8	21 9/16	17 3/8	11/16	22 1/2	7 1/2	18 1/2	14 1/2	8 3/4	2 7/8	3 7/8	6 7/16	31
150, 175	38 1/8	20 1/8	23	16	30 9/16	60 1/8	35 3/8	25 5/8	1 5/16	24 1/2	3 7/8	13 1/2	8 1/2	5 7/16	4 1/4	6 1/2	8 1/4	42
200	38 1/8	20 1/8	23	16	30 9/16	60 1/8	35 3/8	25 5/8	1 5/16	24 1/2	3 7/8	14 9/16	9 9/16	5 7/16	4 5/16	6 1/2	8 5/16	42
225, 250	38 1/8	26 1/8	23	22	39 5/8	63 7/16	35 3/8	25 5/8	1 5/16	24 1/2	5 7/8	18 1/16	13 1/16	9	4 5/16	6 1/2	8 5/16	42
300, 350, 400	40 7/8	34 1/8	23	30	42 5/8	63 7/16	35 3/8	27 5/8	1 5/16	23 1/2	3 7/8	22 1/16	17 1/16	11 13/16	4 1/2	7 1/4	8 1/2	42
Size	**A**	**B**	**C**	**D**	**E***	**F**	**G**	**H****	**J**	**K****	**L**	**M**	**N**	**P**	**Q**	**R**	**S**	**T**
30, 45	(676)	511	351	254	416	918	548	441	17	572	165	233	132	68	73	98	165	787
60	676	384	351	330	454	918	548	441	17	572	165	302	200	140	73	98	165	787
75	676	384	351	330	454	918	548	441	17	572	140	302	200	140	73	98	165	787
100	676	587	351	533	591	1108	548	441	17	572	216	470	368	222	73	98	164	787
125	676	587	351	533	594	1108	548	441	17	572	191	470	368	222	73	98	164	787
150, 175	968	511	584	406	776	1527	899	651	33	622	98	343	216	138	108	165	210	1067
200	968	511	584	406	776	1527	899	651	33	622	98	370	243	138	110	165	211	1067
225, 250	968	664	584	559	1006	1611	899	651	33	622	149	459	332	229	110	165	211	1067
300, 350, 400	1038	867	584	762	1083	1611	899	702	33	597	98	560	433	300	114	184	216	1067

NOTES: **** Sizes 150-400 - Dimension E varies with motor selection and belt adjustment.***
***** Dimensions H and K are the heater suspension points.***

CLEARANCES FROM COMBUSTIBLES

	Top		Flue Connector		Access Panel [H]		Non-Access Side		Bottom [J]		Rear [K]	
Size	inches	(mm)	inches	(mm)	inches	(mm)	inches	(mm)	inches	(mm)	inches	(mm)
30-125	6	(152)	6	(152)	18	(457)	24	(610)	1	(25)	18	(457)
150-400	14	(356)	6	(152)	18	(457)	24	(610)	1	(25)	18	(457)

[H] Access Panel clearance is required for service clearance to controls
[J] Suspend the heater so that the bottom is a minimum of 5' (1.5M) above the floor.
[K] Rear clearance is measured from the back of the blower.

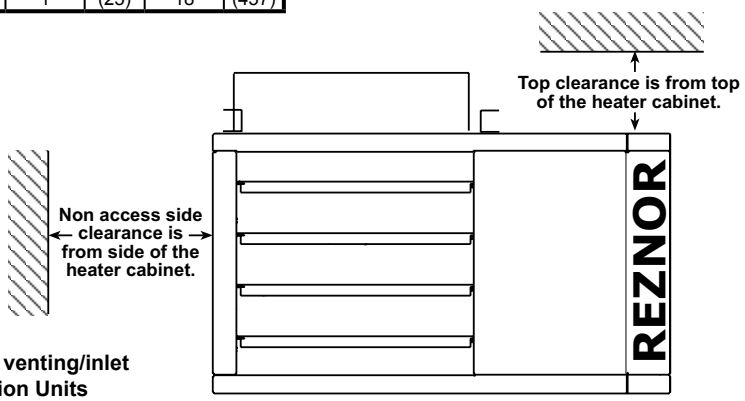

Refer to Reznor web site www.RezSpec.com for venting/inlet air requirements for Reznor Separated Combustion Units

REZNOR®

Model UDBP

Power Vented, High Static Blower Type Unit Heaters for Commercial/Industrial Use

CSA 2.6b

ANSI Z83.8b

DESCRIPTION

Reznor® V3 Series Model UDBP gas-fired unit heaters are available in 14 sizes ranging from 30,000 to 400,000 BTUH gas input. Model UDBP heaters are designed for 82-83% thermal efficiency and are approved for commercial/industrial installations in the United States and Canada by the Canadian Standards Association (CSA).

Reznor V3 Series unit heaters have a refreshing new appearance with a glossy white cabinet finish and less visible hardware. Each size cabinet is easily suspended from four suspension points. The low voltage terminal strip on the outside of the cabinet makes connecting control wiring easy with no panels to remove. The addition of a "G" terminal to the strip, along with the new design of the circuit board, allows for blower only operation (without adding relays). All units have a factory installed gas line nipple to the exterior of the cabinet for easy gas service connection.

The preeminent new internal feature is the TCORE² heat exchanger and single burner combustion system. Other standard features include a single-stage gas valve, multi-try direct spark ignition with timed lockout, pressure switch to verify vent flow, resiliently isolated venter motor, venter wheel with improved housing, and a high temperature limit control. Sizes 30-125 are equipped with a centrifugal blower and direct drive motor with multi-speed taps. Sizes 30 and 45 are capable of handling up to .5" w.c. of external static pressure; Sizes 60-125 will handle up to .75" w.c. of external static pressure. Sizes 150-400 are equipped with a centrifugal blower with an adjustable belt drive and motor. All units are designed for use with optional 30° and 60° downturn nozzles with horizontal and vertical louvers. Operation is controlled through an integrated circuit board. The circuit board monitors heater operation and has LED diagnostic indicator lights to identify abnormalities in control functions.

The V3 Series unit heaters are designed to provide all the features you expect in a Reznor heater plus improved efficiency, easier installation, and a new look ***~ both inside and out.*** Look for the unique white unit with no visible front and bottom hardware, deep red louvers, black side handle, and angled corner to know you have a genuine Reznor unit by Thomas & Betts.

STANDARD FEATURES

- Certified for commercial/industrial heating applications
- 82-83% Thermal efficient ***~ TOP in its class!***
- 45-75°F Rise range - Sizes 30-350 50-80°F Rise range - Size 400
- TCORE² titanium stabilized aluminized steel heat exchanger
- Patented [A] single burner combustion system including a one-piece burner assembly
- 115/1/60 Supply voltage
- 115 Volt open dripproof blower motor with internal overload protection - Sizes 30-125
- 115 Volt open dripproof blower motor with internal overloads and definite purpose motor contactor - Sizes 150-400
- Direct drive blower with multispeed taps - Sizes 30-125
- Adjustable belt drive blower - Sizes 150-400
- Transformer for 24-volt controls
- Integrated circuit board with diagnostic indicator lights
- Blower relay (included on the circuit board)
- Multi-try direct spark ignition with timed lockout
- Single-stage natural gas valve (field adjustable for operation to 9,000 ft. elevation [3])
- Vibration/noise isolated venter motors ***~ designed for low noise operation***
- 4-pt Suspension
- External terminal strip for 24-volt wiring
- External gas connection
- Improved cabinet design with less visible hardware

OPTIONAL FEATURES - FACTORY INSTALLED

- Equipped for propane gas
- Single-stage, propane gas valve (field adjustable for operation to 9,000 ft. elevation [B])
- Two-stage natural gas or propane gas valve - Sizes 60-400
- 409 or 316 Stainless steel heat exchangers
- 208, 230, 480, and 575 Three phase voltage - Sizes 150-400 (step down transformer shipped separate for field installation for 480 and 575 units)
- Adjustable belt drive and motor for up to .5" w.c. external static pressure - Sizes 150-400
- Totally enclosed blower motor - Sizes 150-400
- Belt and blower guards

[A] U.S. Patent No. 6,889,686.
[B] Pressure switch change required for installations above 6,000 ft.

OPTIONAL FEATURES - FIELD INSTALLED

- Vent cap
- Thermostat
- Thermostat guard with locking cover
- Vertical louvers
- Downturn nozzle (30° or 60° deflection, with and without vertical louvers)
- Gas conversion kits (natural and propane)
- High altitude kits (above 6,000 ft. to 9,000 ft.)
- Primary/secondary controls for zoning up to six units
- Duct flange
- Polytube adapters
- Blower and belt guards
- Hanger kits for 1" pipe
- Stepdown transformer (for 208/115, 230/115 or 460/115 supply voltage) - Sizes 30-125
- Manual shutoff valves

TECHNICAL DATA

Model UDBP

Size		30	45	60	75	100	125	150	175	200	225	250	300	350	400
Input Heating Capacity	BTUH	30,000	45,000	60,000	75,000	105,000	120,000	150,000	175,000	200,000	225,000	250,000	300,000	350,000	400,000
	kw/h	8.8	13.2	17.6	22.0	30.8	35.2	43.9	51.2	58.6	65.9	73.2	87.8	102.5	117.1
Thermal Efficiency (%)		82	82	82	82	83	83	83	83	83	83	83	83	83	82
Output Heating Capacity [C]	BTUH	24,600	36,900	49,200	61,500	87,150	99,600	124,500	145,250	166,000	186,750	207,500	249,000	290,500	328,000
	kw/h	7.2	10.8	14.4	18.0	25.6	29.2	36.4	42.5	48.6	54.7	60.8	72.9	85.1	96.0
Gas Connection (inches) [D]	Natural	1/2	1/2	1/2	1/2	1/2	1/2	1/2	1/2	1/2	3/4	3/4	3/4	3/4	3/4
	Propane	1/2	1/2	1/2	1/2	1/2	1/2	1/2	1/2	1/2	3/4	3/4	3/4	3/4	3/4
Vent Connection Size [E] (inches diameter)		4	4	4	4	4	4	5	5	5	5	5	6	6	6
Control Amps (24 volt)		1.0	1.0	1.0	1.0	1.0	1.0	1.0	1.0	1.0	1.0	1.0	1.0	1.0	1.0
Full Load Amps (with standard HP 115V motor)		3.7	3.7	7.1	7.1	13.0	13.0	5.9	9.6	10.5	12.7	12.7	17.7	27.3	27.3
Maximum Over Current Protection (115V) [F]		15	15	15	15	30	30	15	20	25	30	30	40	60	60
Normal Power Consumption (watts @ full load, medium speed)		215	215	447	447	537	537	230	415	485	675	675	1260	1635	1635
Minimum Discharge Air Temp. Rise	°F	45	45	45	45	45	45	45	45	45	45	45	45	45	50
Maximum Discharge Air Temp. Rise	°F	75	75	75	75	75	75	75	75	75	75	75	75	75	80
Maximum Air Volume	CFM	506	759	1012	1265	1793	2049	2562	2989	3416	3843	4270	5123	5977	6185
	M^3/min	14.3	21.5	28.7	35.8	50.8	58.0	72.5	84.6	96.7	108.8	120.9	145.1	169.2	175.1
Minimum Air Volume	CFM	304	456	607	759	1076	1230	1537	1793	2049	2306	2562	3074	3586	4100
	M^3/min	8.6	12.9	17.2	21.5	30.5	34.8	43.5	50.8	58.0	65.3	72.5	87.0	101.5	116.1
Discharge Air Opening Area	FT^2	0.96	0.96	1.25	1.25	2.01	2.01	2.56	2.56	2.56	3.51	3.51	4.79	4.79	4.79
	M^2	0.09	0.09	0.12	0.12	0.19	0.19	0.24	0.24	0.24	0.33	0.33	0.45	0.45	0.45
Maximum Output Velocity	FPM	527	791	810	1012	892	1020	1001	1168	1334	1095	1217	1070	1248	1291
	M/min	159	239	239	299	267	305	305	356	407	334	371	326	380	393
Minimum Output Velocity	FPM	316	475	486	607	535	612	600	700	800	657	730	642	749	856
	M/min	96	143	143	179	160	183	183	213	244	200	223	196	228	261
Standard Blower Motor HP		1/6	1/6	1/3	1/3	3/4	3/4	1/4	1/2	1/2	3/4	3/4	1-1/2	2	2
Blower Size	inches	9 X 6	9 X 6	9 X 6	9 X 6	10 X 10	10 X 10	12 x 12	12 x 12	12 x 12	15 x 11	15 x 11	15 x 15	15 x 15	15 x 15
Approximate Net Weight	lbs	72	77	89	94	131	136	255	275	275	320	335	375	410	425
	kg	33	35	40	43	59	62	116	125	125	145	152	170	186	193
Approximate Ship Weight	lbs	90	95	110	115	176	181	315	335	335	400	415	475	510	525
	kg	41	43	50	52	80	82	143	152	152	181	188	215	231	238

[C] CSA rating for altitudes to 2000 ft.
[D] Size shown is for gas connection to a single stage gas valve, not supply line size.
[E] Smaller or larger vent pipe diameters may be allowed; refer to the Venting Installation Manual, Form I-UD-V-PV. If vent diameter is different from vent connection, reducer/enlargers will be field-required.
[F] MOP = 2.25 x largest motor FLA + remaining load. Answer is rounded down to the next size of commercially available circuit breaker or fuse.

For installations where dirt, dust, and other air borne contamination is present in the indoor environment, it is recommended to use separated combustion units (Model UDBS). These models use air from outside the space for combustion. This will help reduce the build up of contaminates on the burner which would affect the combustion process. Refer to the installation manuals for recommended frequency of maintenance and cleaning.

DIMENSIONS

Model UDBP

±1/16" (2mm)

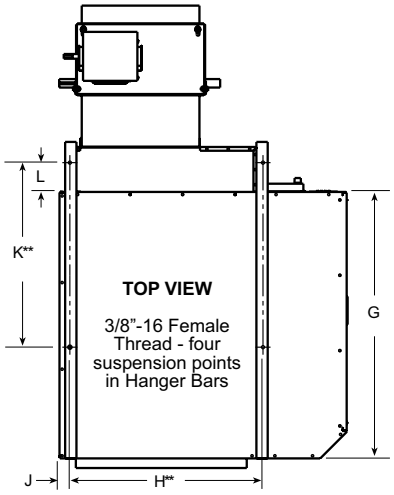

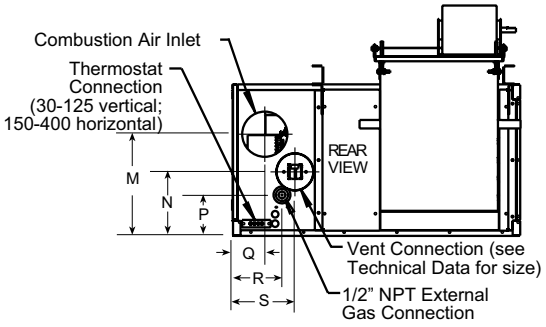

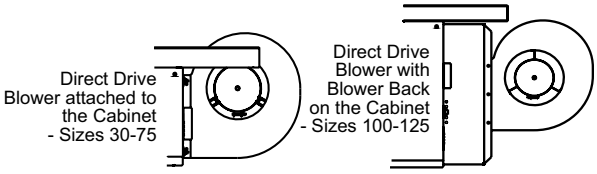

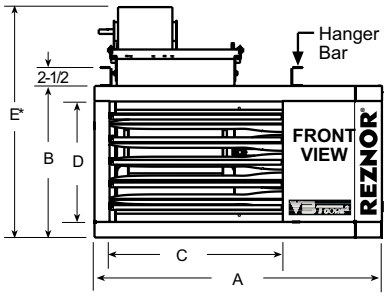

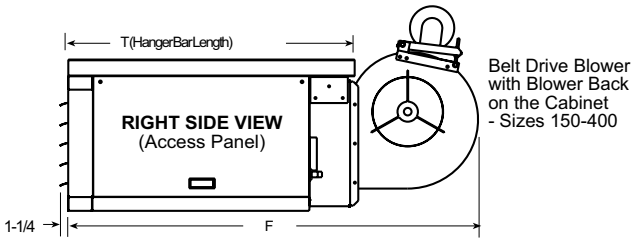

Size	A	B	C	D	E	F	G	H	J	K	L	M	N	P	Q	R	S	T
30, 45	26 5/8	12 1/8	13 13/16	10	16 3/8	36 1/8	21 9/16	17 3/8	11/16	22 1/2	6 1/2	9 3/16	5 3/16	2 11/16	2 7/8	3 7/8	6 1/2	31
60	26 5/8	15 1/8	13 13/16	13	17 7/8	36 1/8	21 9/16	17 3/8	11/16	22 1/2	6 1/2	11 7/8	7 7/8	5 1/2	2 7/8	3 7/8	6 1/2	31
75	26 5/8	15 1/8	13 13/16	13	17 7/8	36 1/8	21 9/16	17 3/8	11/16	22 1/2	5 1/2	11 7/8	7 7/8	5 1/2	2 7/8	3 7/8	6 1/2	31
100	26 5/8	23 1/8	13 13/16	21	23 1/4	43 5/8	21 9/16	17 3/8	11/16	22 1/2	8 1/2	18 1/2	14 1/2	8 3/4	2 7/8	3 7/8	6 7/16	31
125	26 5/8	23 1/8	13 13/16	21	23 1/4	43 5/8	21 9/16	17 3/8	11/16	22 1/2	7 1/2	18 1/2	14 1/2	8 3/4	2 7/8	3 7/8	6 7/16	31
150, 175	38 1/8	20 1/8	23	16	30 9/16	60 1/8	35 3/8	25 5/8	1 5/16	24 1/2	3 7/8	13 1/2	8 1/2	5 7/16	4 1/4	6 1/2	8 1/4	42
200	38 1/8	20 1/8	23	16	30 9/16	60 1/8	35 3/8	25 5/8	1 5/16	24 1/2	3 7/8	14 9/16	6 3/8	5 7/16	4 5/16	6 1/2	8 5/16	42
225, 250	38 1/8	26 1/8	23	22	39 5/8	63 7/16	35 3/8	25 5/8	1 5/16	24 1/2	5 7/8	18 1/16	13 1/16	9	4 5/16	6 1/2	8 5/16	42
300, 350, 400	40 7/8	34 1/8	23	30	42 5/8	63 7/16	35 3/8	27 5/8	1 5/16	23 1/2	3 7/8	22 1/16	17 1/16	11 13/16	4 1/2	7 1/4	8 1/2	42
Size	**A**	**B**	**C**	**D**	**E***	**F**	**G**	**H****	**J**	**K****	**L**	**M**	**N**	**P**	**Q**	**R**	**S**	**T**
30, 45	(676)	(308)	(351)	(254)	(416)	(918)	(548)	(441)	(17)	(572)	(165)	(233)	(132)	(68)	(73)	(98)	(165)	(787)
60	(676)	(384)	(351)	(330)	(454)	(918)	(548)	(441)	(17)	(572)	(165)	(302)	(200)	(140)	(73)	(98)	(165)	(787)
75	(676)	(384)	(351)	(330)	(454)	(918)	(548)	(441)	(17)	(572)	(140)	(302)	(200)	(140)	(73)	(98)	(165)	(787)
100	(676)	(587)	(351)	(533)	(591)	(1,108)	(548)	(441)	(17)	(572)	(216)	(470)	(368)	(222)	(73)	(98)	(164)	(787)
125	(676)	(587)	(351)	(533)	(591)	(1,108)	(548)	(441)	(17)	(572)	(191)	(470)	(368)	(222)	(73)	(98)	(164)	(787)
150, 175	(968)	(511)	(584)	(406)	(776)	(1,527)	(899)	(651)	(33)	(622)	(98)	(343)	(216)	(138)	(108)	(165)	(210)	(1,067)
200	(968)	(511)	(584)	(406)	(776)	(1,527)	(899)	(651)	(33)	(622)	(98)	(370)	(162)	(138)	(110)	(165)	(211)	(1,067)
225, 250	(968)	(664)	(584)	(559)	(1,006)	(1,611)	(899)	(651)	(33)	(622)	(149)	(459)	(332)	(229)	(110)	(165)	(211)	(1,067)
300, 350, 400	(1,038)	(867)	(584)	(762)	(1,083)	(1,611)	(899)	(702)	(33)	(597)	(98)	(560)	(433)	(300)	(114)	(184)	(216)	(1,067)

NOTES:
**** Sizes 150-400 - Dimension E varies with motor selection and belt adjustment.***
***** Dimensions H and K are the heater suspension points.***

CLEARANCES FROM COMBUSTIBLES

Size	Top		Flue Connector		Access Panel [H]		Non-Access Side		Bottom [J]		Rear [K]	
	inches	(mm)	inches	(mm)	inches	(mm)	inches	(mm)	inches	(mm)	inches	(mm)
30-125	6	(152)	6	(152)	18	(457)	24	(610)	1	(25)	18	(457)
150-400	14	(356)	6	(152)	18	(457)	24	(610)	1	(25)	18	(457)

[H] Access Panel clearance is required for service clearance to controls
[J] Suspend the heater so that the bottom is a minimum of 5' (1.5M) above the floor.
[K] Rear clearance is measured from the back of the blower.

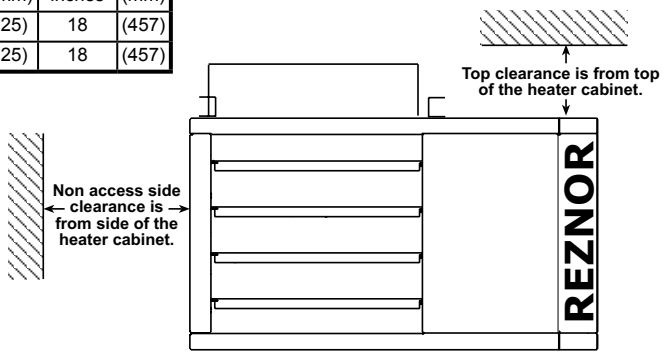

REZNOR®
MODEL F

ANSI Z83.8

CAN/CGA 2.6

Gas-Fires, Gravity-Vented, Fan-Type Unit Heater for Commercial/Industrial Use

WARNING: Gas-fired appliances are not designed for use in hazardous atmospheres containing flammable vapors or combustible dust, or atmospheres containing chlorinated or halogenated hydrocarbons.

Installations in public garages or airplane hangars are permitted when in accordance with ANSI Z223.1 and NFPA 54 Codes or CAN1-B149 Codes and enforcing authorities.

DESCRIPTION

Reznor® Series 100, Model F gas-fired, gravity-vented unit heaters are designed for 80% thermal efficiency and are designed for use with natural or propane gas, as specified, in sizes from 25,000 to 400,000 BTUH gas input.

Model F unit heaters are designed for ceiling suspension with a propeller fan for air delivery.

A terminal strip connector facilitates field connection to a remote 24-volt thermostat for automatic operation. Each unit is provided with a fan control and all required limit safety controls, including an energy cutoff (ECO) device and a blocked vent switch.

These units are approved for installation in The United States and Canada by the Canadian Standards Association (CSA).

NOTE: When installing gravity vented appliances check local and state codes for requirements. Some states require the addition of spark pilot Option AH2 or AH3.

STANDARD FEATURES

- Orifices for natural gas
- Aluminized steel heat exchanger
- Aluminized steel burner rack with stainless steel insert
- Spark ignited, intermittent safety pilot with electronic flame supervision
- Single-stage combination gas valve (field adjustable for high altitude operation)
- 115/1/60 supply voltage
- 115 volt fan motor with internal overload protection
- Fan and limit safety controls
- Energy cutoff (ECO) device
- Blocked vent shutoff system
- 24-volt control voltage transformer
- Individually adjustable horizontal louvers
- Full safety fan guard
- Terminal strip connector for 24-volt field wiring
- Convenient bottom burner access
- 2-point 3/8"-16 threaded hanger connections
- Horizontal/vertical vent outlet

The Energy Policy Act of 2005 mandated that beginning August of 2008, no Gravity Vented Unit Heaters may be sold without an Intermittent Ignition Device (No Standing Pilot- Spark Ignition Only) AND, (either an automatic shutoff vent damper or a power vent exhaust). Your state may have already enacted this restriction in their local codes. Please take note of this when placing orders for gravity vented units.

OPTIONAL FEATURES - FACTORY INSTALLED

- Equipped for propane gas
- E-3 (409) stainless steel heat exchanger and burner
- Two-stage gas control (50% low fire) - Sizes 75-400
- Spark ignited, intermittent safety pilot with electronic flame supervision with timed lockout (timed lockout is required for propane gas)
- Manual summer/winter switch
- Burner air shutters
- 208/230 single phase supply voltage
- 220/240 volt/50 Hertz electrical operation
- Totally enclosed 115V motor
- Low ambient fan control relay

OPTIONAL FEATURES - FIELD INSTALLED

- Power venter
- Vertical louvers
- Downturn air nozzle, 25-65° or 50-90° variable air deflector range (includes 4-point suspension kit)
- Thermostat and relay kits
- Air recirculation kits
- Manual summer/winter switch
- Multiple heater control
- 4-point suspension kit
- Unit-mounted thermostat bracket
- Step down transformer 230/115 or 460/115
- Burner air shutters
- Low ambient fan control relay kit
- Hanger kit to suspend from 1" pipe (2 or 4 point suspension)
- Single-stage and two-stage thermostats
- Thermostat guard with locking cover
- Manual shutoff valve and union
- Gas conversion kit

NOTE: Not certified for residential use.

NOTE: ***Regulated combination redundant gas valve consists of combination pilot solenoid valve, electric gas valve, pilot filter, pressure regulator, pilot shutoff, and manual shutoff, all in one body. Gas supply pressure must not exceed 0.5 psi (8 oz. or 14" w.c.). Minimum inlet pressure for natural gas is 5" w.c.; minimum inlet pressure for propane gas is 11" w.c.***

TECHNICAL DATA

Model F

Size		25		50		75		100		125	
Heating Input - BTUH (kW)		25,000	(7.3)	50,000	(14.7)	75,000	(22.0)	100,000	(29.3)	125,000	(36.6)
Thermal Output - BTUH (kw) (80%) [A]		20,000	(5.9)	40,000	(11.7)	60,000	(17.6)	80,000	(23.4)	100,000	(29.3)
Vent Outlet Diameter		4" Rd		4" Rd		5" Oval		6"Oval		7" Oval	
Gas Connection - Natural Gas [B]		1/2"		1/2"		1/2"		1/2"		1/2"	
Control Amps (24-volt)		0.33		0.33		0.33		0.33		0.33	
Full-Load Amps (115 volt)		0.8		1.3		1.9		2.8		2.9	
Normal Consumption (watts)		60		95		135		195		205	
Throw at 8' (2.4M) Mntg Ht - ft (M) [C]		35	(11)	39	(12)	48	(15)	60	(18)	73	(22)
Motor HP [D]	Standard	1/50		1/35		1/15		1/30		1/30	
	Optional Enclosed	--		1/15		1/15		1/8		1/8	
Motor RPM		1550		1550		1550		1050		1050	
Fan Diameter - in. (mm)		10	(254)	10	(254)	12	(305)	14	(356)	16	(406)
Air Volume - CFM (M^3/hr)		380	(646)	650	(1,104)	980	(1,665)	1,250	(2,124)	1,600	(2,718)
Outlet Velocity - FPM (M/s)		423	(2.1)	853	(4.3)	1,166	(5.9)	1,358	(6.9)	1,330	(6.8)
Approximate Net Wt - lbs (kg)		72	(33)	79	(36)	88	(40)	97	(44)	127	(58)
Approximate Shipping Wt - lbs (kg)		89	(40)	96	(44)	107	(49)	118	(54)	150	(68)

Size		165		200		250		300		400	
Heating Input - BTUH (kW)		165,000	(48.4)	200,000	(58.6)	250,000	(73.3)	300,000	(87.9)	400,000	(117.2)
Thermal Output - BTUH (kw) (80%) [A]		132,000	(38.7)	160,000	(46.9)	200,000	(58.6)	240,000	(70.3)	320,000	(93.8)
Vent Outlet Diameter		8" Oval		8" Oval		10" Oval		10" Oval		12" Oval	
Gas Connection - Natural Gas [B]		1/2"		1/2"		1/2"		3/4"		3/4"	
Control Amps (24-volt)		0.23		0.23		0.23		0.2		0.2	
Full-Load Amps (115 volt)		4		4		2.5		4		7	
Normal Consumption (watts)		275		300		280		375		565	
Throw at 8' (2.4M) Mntg Ht - ft (M) [C]		78	(24)	85	(26)	96	(29)	108	(33)	120	(37)
Motor HP [D]	Standard	1/20		1/20		1/6		1/4		1/2	
	Optional Enclosed	1/8		1/6		1/6		1/2		1/2	
Motor RPM		1050		1050		850		850		850	
Fan Diameter - in. (mm)		16	(406)	20	(508)	22	(559)	22	(559)	24	(610)
Air Volume - CFM (M^3/hr)		2,200	(3,738)	2,800	(4,757)	3,360	(5,708)	3,800	(6,456)	4,940	(8,393)
Outlet Velocity - FPM (M/s)		1,100	(5.6)	1,217	(6.2)	1,182	(6.0)	1,426	(7.2)	1,420	(7.2)
Approximate Net Wt - lbs (kg)		149	(68)	170	(77)	204	(93)	221	(100)	276	(125)

[A] For U.S. installations, ratings for altitudes to 2000 ft.. Above 2000 ft., derate by 4% for each 1000 ft. above sea level.
[A] For Canadian installations, ratings for altitudes to 2000 ft. High altitude units (2001-4500 ft.) are derated by 10% of maximum input.
[B] Gas connection for propane is 1/2" for all sizes. Sizes shown are for gas connection to a single-stage gas valve; NOT gas supply line size.
[C] Additional mounting heights shown later in this catalog.
[D] All other information in this table is based on a heater equipped with a standard 115v motor. (The standard motor for a Model 25 is an enclosed motor; all other standard motors are open motors. Optional enclosed motors are available in 115v only.)

DIMENSIONS

Model F

±1/16" (2mm)

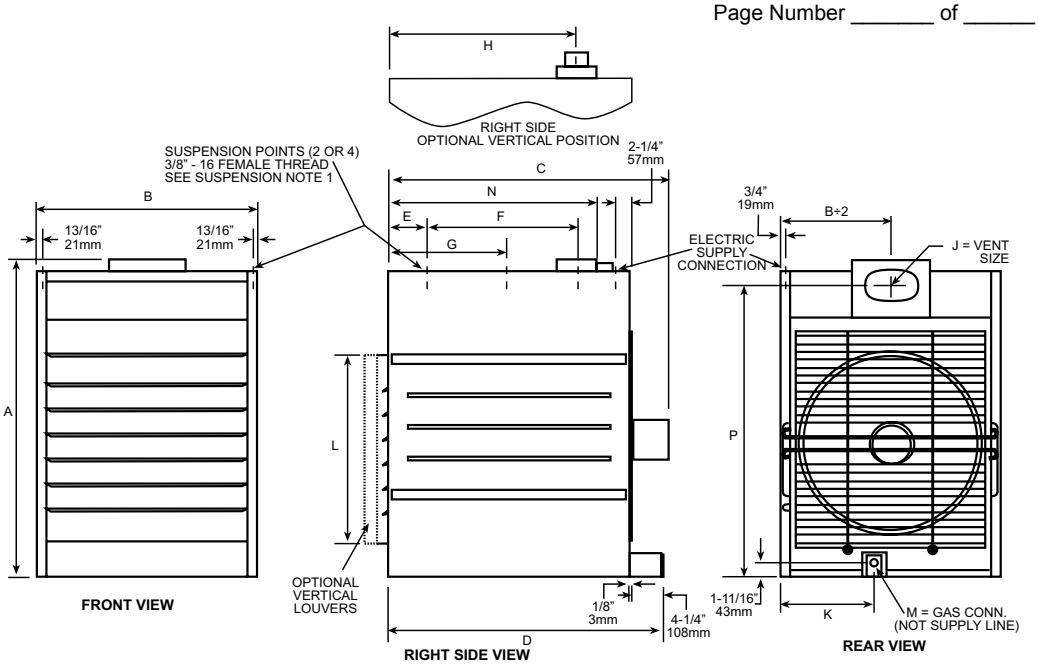

Size		A	B	C	D	E	F	G	H	J	K	L	M - in. Nat	M - in. Pro	N	P
25,50	in	30 1/8	13 1/2	27	31 1/2	5 7/8	14 1/2	14	19	4 Rnd	10 1/4	16	1/2	1/2	21 1/2	27 5/8
	(mm)	(765)	(343)	(686)	(800)	(149)	(368)	(356)	(483)	--	(260)	(406)	--	--	(546)	(702)
75	in	30 1/8	15 1/2	27	31 1/2	5 7/8	14 1/2	14	19	5 Oval	10 1/2	16	1/2	1/2	21 1/2	27 5/8
	(mm)	(765)	(394)	(686)	(800)	(149)	(368)	(356)	(483)	--	(267)	(406)	--	--	(546)	(702)
100	in	30 1/8	17 1/2	30 1/2	31 1/2	5 7/8	14 1/2	14	19	6 Oval	12 7/8	16	1/2	1/2	21 1/2	27 5/8
	(mm)	(765)	(445)	(775)	(800)	(149)	(368)	(356)	(483)	--	(327)	(406)	--	--	(546)	(702)
125	in	32	23 1/4	30 1/2	31 1/2	5 7/8	14 1/2	14	19	7 Oval	14 1/2	16	1/2	1/2	21 1/2	28 1/2
	(mm)	(813)	(591)	(775)	(800)	(149)	(368)	(356)	(483)	--	(368)	(406)	--	--	(546)	(724)
165	in	40 1/8	20 1/4	35 1/2	36	4 7/8	19 1/2	15 3/4	23 3/8	8 Oval	14 1/4	24	1/2	1/2	27	36 3/4
	(mm)	(1,019)	(514)	(902)	(914)	(124)	(495)	(400)	(594)	--	(362)	(610)	--	--	(686)	(933)
200	in	40 1/8	23 1/4	36 1/4	36	4 7/8	19 1/2	15 3/4	23 3/8	8 Oval	14 3/8	24	1/2	1/2	27	36 3/4
	(mm)	(1,019)	(591)	(921)	(914)	(124)	(495)	(400)	(594)	--	(365)	(610)	--	--	(686)	(933)
250	in	43 1/2	28 3/4	36 1/4	36	4 7/8	19 1/2	15 3/4	21 3/4	10 Oval	12 3/8	24	1/2	1/2	27	38 3/8
	(mm)	(1,105)	(730)	(921)	(914)	(124)	(495)	(400)	(552)	--	(314)	(610)	--	--	(686)	(975)
300	in	43 1/2	28 3/4	36 3/4	36	4 7/8	19 1/2	15 3/4	21 3/4	10 Oval	12 3/8	24	3/4	1/2	27	38 3/8
	(mm)	(1,105)	(730)	(933)	(914)	(124)	(495)	(400)	(552)	--	(314)	(610)	--	--	(686)	(975)
400	in	43 1/2	37	37 1/4	36	4 7/8	19 1/2	15 3/4	21 3/4	12 Oval	13	24	3/4	1/2	27	38 3/8
	(mm)	(1,105)	(940)	(946)	(914)	(124)	(495)	(400)	(552)	--	(330)	(610)	--	--	(686)	(975)

Units, bottom clearance exceeding 12" minimum is not required but may be desirable.

CLEARANCES FROM COMBUSTIBLES

Required Clearances (inches)

Sizes	Top [E]	Flue Connector	Sides	Bottom [F]	Rear [G]
25-125	2	6	18	12	24
165-400	6	6	18	12	24

[E] Measure top clearance as illustrated below.
[F] When supplied with optional downturn nozzle, bottom clearance is 42". For service purposes on standard units, bottom clearance exceeding 12" minimum is not required but may be desirable.
[G] For service purposes only, rear must have 24" clearance.

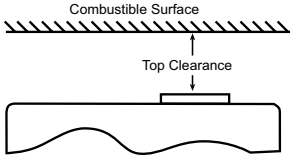

SUSPENSION NOTES:
1) Use dimension "G" for 2-point suspension and "E" and "F" for 4-point suspension.
2) Factory equipped with 2-point suspension; 4-point is optional.

REZNOR®
MODEL B

Gas-Fired, Gravity-Vented, Blower-Type Unit Heater for Commercial/Industrial Use

ANSI Z83.8

CAN/CGA 2.6

WARNING: Gas-fired appliances are not designed for use in hazardous atmospheres containing flammable vapors or combustible dust, or atmospheres containing chlorinated or halogenated hydrocarbons.

Installations in public garages or airplane hangars are permitted when in accordance with ANSI Z223.1 and NFPA 54 Codes or CAN1-B149 Codes and enforcing authorities.

DESCRIPTION

Reznor® Series 100, Model B gas-fired gravity-vented unit heaters are designed for 80% thermal efficiency and are designed for use with natural or propane gas, as specified, in sizes from 25,000 to 400,000 BTUH gas Input.

Model B unit heaters are designed for ceiling suspension with a centrifugal blower for air delivery. Sizes 25-100 are equipped with a direct drive blower motor with multi-speed taps capable of handling up to .50" w.c. of external static pressure. Sizes 125-400 are standardly equipped with a blower using an adjustable belt drive and motor capable of handling external static pressure up to .25" w.c. Optional motors and drives are available to increase the blower capability to handle up to .50" w.c. of external static pressure.

A terminal strip connector facilitates field connection to a remote 24-volt thermostat for automatic operation. Each unit is provided with a fan control and all required limit safety controls, including an energy cutoff (ECO) device and a blocked vent switch.

These units are approved for installation in The United States and Canada by the Canadian Standards Association (CSA). Canadian units require the selection of a totally enclosed motor. (An open motor may be selected for a heater to be installed in Canada only when the heater will be equipped with a Reznor® field-installed blower cabinet.)

NOTE: When installing gravity vented appliances check local and state codes for requirements. Some states require the addition of spark pilot Option AH2 or AH3.

STANDARD FEATURES

- Orifices for natural gas
- Aluminized steel heat exchanger
- Aluminized steel burner rack with stainless steel insert
- Spark ignited, intermittent safety pilot with electronic flame supervision
- Single-stage combination gas valve (field adjustable for high altitude operation)
- 115/1/60 supply voltage - Sizes 25-300
- 230/1/60 supply voltage - Size 400
- ODP motor with internal overload (U.S. installations)
- Totally enclosed blower motor (Canadian installations)
- Motor contactor - Sizes 300 and 400
- Direct drive blower with multi-speed taps - Sizes 25-100
- Adjustable belt drive blower - Sizes 125 - 400
- Fan and limit safety controls
- Blocked vent shutoff system
- Energy cutoff (ECO) device
- 24-volt control voltage transformer
- Horizontal/Vertical vent outlet
- Horizontal louvers or Duct adapter
- Terminal strip connector for 24-volt field wiring
- Convenient bottom burner access
- 4-point 3/8"-16 threaded hanger connections

The Energy Policy Act of 2005 mandated that beginning August of 2008, no Gravity Vented Unit Heaters may be sold without an Intermittent Ignition Device (No Standing Pilot- Spark Ignition Only) AND, (either an automatic shutoff vent damper or a power vent exhaust). Your state may have already enacted this restriction in their local codes. Please take note of this when placing orders for gravity vented units.

OPTIONAL FEATURES - FACTORY INSTALLED

- Equipped for propane gas
- E-3 (409) stainless steel heat exchanger and burner
- Two-stage gas control (50% low fire) - Sizes 75-400
- Spark ignited, intermittent safety pilot with electronic flame supervision with timed lockout (timed lockout is required for propane gas)
- Burner air shutters
- 208/230 single phase supply voltage - Sizes 125-400
- 208/230 three phase supply voltage - Sizes 125-400
- 460 three phase supply voltage - Sizes 125-400
- 575 three phase supply voltage - Sizes 125-400
- Alternate motor HP and drive - Sizes 125-400
- Totally enclosed blower motor - Sizes 125-400

NOTE: ***Regulated combination redundant gas valve consists of combination pilot solenoid valve, electric gas valve, pilot filter, pressure regulator, pilot shutoff, and manual shutoff, all in one body. Gas supply pressure must not exceed 0.5 psi (8 oz. or 14" w.c.). Minimum inlet pressure for natural gas is 5" w.c.; minimum inlet pressure for propane gas is 11" w.c.***

OPTIONAL FEATURES - FIELD INSTALLED

- Power venter
- Vertical louvers
- Downturn air nozzle, 25-65° or 50-90° variable air deflector range
- Thermostat and relay kits
- Air recirculation kits
- Manual summer/winter switch
- Filter cabinet with 1" or 2" filters
- Polytube adapter - Models 75-400
- Multiple heater control
- Hanger kits to suspend from 1" pipe or to use with vibration isolation suspension
- Unit-mounted thermostat bracket
- Step down transformer 230/115 or 460/115 - Sizes 25-100
- Burner air shutters
- Low ambient fan control relay kit
- Belt guard and/or blower inlet guard
- Single-stage and two-stage thermostats
- Thermostat guard with locking cover
- Manual shutoff valve and union
- Gas conversion kit

NOTE: Not certified for residential use.

TECHNICAL DATA

Model B

Size	**25**		**50**		**75**		**100**		**125**	
Heating Input - BTUH (kW)	25,000	(7.3)	50,000	(14.7)	75,000	(22.0)	100,000	(29.3)	125,000	(36.6)
BTUH Thermal Output (80%) [A]	20,000	(5.9)	40,000	(11.7)	60,000	(17.6)	80,000	(23.4)	100,000	(29.3)
Vent Outlet Diameter	4" Rd		4" Rd		5" Oval		6"Oval		7" Oval	
Gas Connection - Natural Gas [B]	1/2"		1/2"		1/2"		1/2"		1/2"	
Control Amps (24-volt)	0.33		0.33		0.33		0.33		0.33	
Full-Load Amps (115 volt)	2.9		2.9		5.3		5.3		6	
Normal Consumption (watts) - (60°F rise and .25" w.c. ESP)	140		175		340		430		500	
Maximum Air Volume - CFM (M^3/hr)	410	(697)	820	(1,393)	1,230	(2,090)	1,645	(2,795)	2,055	(3,491)
Minimum Air Volume - CFM (M^3/hr)	245	(416)	490	(832)	740	(1,257)	985	(1,673)	1,235	(2,098)
Standard Motor Horsepower	1/6		1/6		1/3		1/3		1/3	
Blower Size (inches)	9x6		9x6		9x6		9x9		10x10	
Approximate Net Wt - lbs (kg)	93	(42)	100	(45)	114	(52)	126	(57)	176	(80)
Approximate Shipping Wt - lbs (kg)	193	(88)	206	(93)	229	(104)	241	(109)	318	(144)
Size	**165**		**200**		**250**		**300**		**400**	
Heating Input - BTUH (kW)	165,000	(48.4)	200,000	(58.6)	250,000	(73.3)	300,000	(87.9)	400,000	(117.2)
BTUH Thermal Output (80%) [A]	132,000	(38.7)	160,000	(46.9)	200,000	(58.6)	240,000	(70.3)	320,000	(93.8)
Vent Outlet Diameter	8" Oval		8" Oval		10" Oval		10" Oval		12" Oval	
Gas Connection - Natural Gas [B]	1/2"		1/2"		1/2"		3/4"		3/4"	
Control Amps (24-volt)	0.23		0.23		0.23		0.2		0.2	
Full-Load Amps (115 volt)	9		9		11		13		230V-9.1	
Normal Consumption (watts) - (60°F rise and .25" w.c. ESP)	710		750		1000		1320		1650	
Maximum Air Volume - CFM (M^3/hr)	2,715	(4,613)	3,290	(5,590)	4,115	(6,991)	4,935	(8,384)	6,500	(11,043)
Minimum Air Volume - CFM (M^3/hr)	1,625	(2,761)	1,975	(3,355)	2,465	(4,188)	2,960	(5,029)	3,900	(6,626)
Standard Motor Horsepower	1/2		1/2		3/4		1-Jan		1-Jan	
Blower Size (inches)	12x9		15x11		15x11		15x11		15x15	
Approximate Net Wt - lbs (kg)	201	(91)	235	(107)	273	(124)	296	(134)	390	(177)
Approximate Shipping Wt - lbs (kg)	343	(156)	385	(175)	431	(196)	454	(206)	561	(254)

[A] For U.S. installations, ratings for altitudes to 2000 ft.. Above 2000 ft., derate by 4% for each 1000 ft. above sea level.
[A] For Canadian installations, ratings for altitudes to 2000 ft. High altitude units (2001-4500 ft.) are derated by 10% of maximum input.
[B] Gas connection for propane is 1/2" for all sizes. Sizes shown are for gas connection to a single-stage gas valve; NOT gas supply line size.

DIMENSIONS

Model B

±1/16" (2mm)

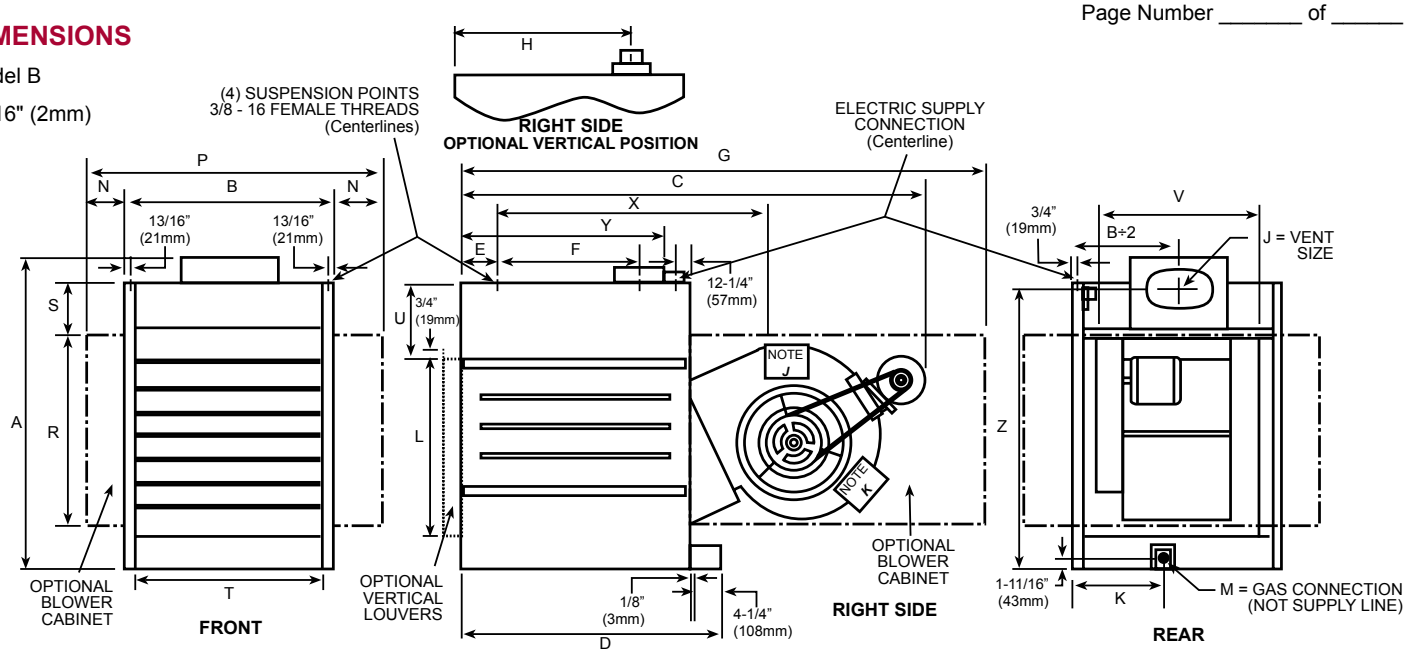

Size		A	B	C [C]	D	E	F [D]	G [E F]	H	J	K	L [E G]	M Nat	M Pro	N [E]	P [E]	R [E]	S [E]	T [G]	U [G]	V [E]	W [E]	X [H]	Y	Z
25	in	30 1/8	13 1/2	43 1/2	31 1/2	5 7/8	14 1/2	61 1/2	19	4 Rnd	10 1/4	15 7/8	1/2	1/2	3 3/4	21	17 3/4	5 1/4	10 3/4	8 1/2	14 3/4	6 1/4	31 1/4	21 1/2	27 5/8
	mm	(765)	(343)	(1,105)	(800)	(149)	(368)	(1,562)	(483)	--	(260)	(403)	--	--	(95)	(533)	(451)	(133)	(273)	(216)	(375)	(159)	(794)	(546)	(702)
50	in	30 1/8	13 1/2	50	31 1/2	5 7/8	14 1/2	61 1/2	19	4 Rnd	10 1/4	15 7/8	1/2	1/2	3 3/4	21	17 3/4	5 1/4	10 3/4	8 1/2	14 3/4	6 1/4	31 1/4	21 1/2	27 5/8
	mm	(765)	(343)	(1,270)	(800)	(149)	(368)	(1,562)	(483)	--	(260)	(403)	--	--	(95)	(533)	(451)	(133)	(273)	(216)	(375)	(159)	(794)	(546)	(702)
75	in	30 1/8	15 1/2	50	31 1/2	5 7/8	14 1/2	61 1/2	19	5 Oval	10 1/2	15 7/8	1/2	1/2	2 3/4	21	17 3/4	5 1/4	12 3/4	8 1/2	14 3/4	6 1/4	31 1/4	21 1/2	27 5/8
	mm	(765)	(394)	(1,270)	(800)	(149)	(368)	(1,562)	(483)	--	(267)	(403)	--	--	(70)	(533)	(451)	(133)	(324)	(216)	(375)	(159)	(794)	(546)	(702)
100	in	30 1/8	17 1/2	50	31 1/2	5 7/8	14 1/2	61 1/2	19	6 Oval	12 7/8	15 7/8	1/2	1/2	1 3/4	21	17 3/4	5 1/4	14 3/4	8 1/2	14 3/4	6 1/4	31 1/4	21 1/2	27 5/8
	mm	(765)	(445)	(1,270)	(800)	(149)	(368)	(1,562)	(483)	--	(327)	(403)	--	--	(44)	(533)	(451)	(133)	(375)	(216)	(375)	(159)	(794)	(546)	(702)
125	in	32	23 1/4	47 1/2	31 1/2	5 7/8	14 7/8	66	18	7 Oval	14 1/2	15 7/8	1/2	1/2	1 3/8	26	17 3/4	5 1/4	20 1/2	8 1/2	20 1/2	6 1/4	35 3/4	21 1/2	28 1/2
	mm	(813)	(591)	(1,207)	(800)	(149)	(378)	(1,676)	(457)	--	(368)	(403)	--	--	(35)	(660)	(451)	(133)	(521)	(216)	(521)	(159)	(908)	(546)	(724)
165	in	40 1/8	20 1/4	61	36	4 7/8	19 1/2	76 1/8	23 3/8	8 Oval	14 1/4	23 7/8	1/2	1/2	2 7/8	26	25 1/4	7 1/4	17 1/2	11 1/2	20 1/2	8	36 3/4	27	36 3/4
	mm	(1,019)	(514)	(1,549)	(914)	(124)	(495)	(1,934)	(594)	--	(362)	(606)	--	--	(73)	(660)	(641)	(184)	(445)	(292)	(521)	(203)	(933)	(686)	(933)
200	in	40 1/8	23 1/4	66 1/2	36	4 7/8	19 1/2	76 1/8	23 3/8	8 Oval	14 3/8	23 7/8	1/2	1/2	1 3/8	26	25 1/4	7 1/4	20 1/2	11 1/2	20 1/2	8	36 3/4	27	36 3/4
	mm	(1,019)	(591)	(1,689)	(914)	(124)	(495)	(1,934)	(594)	--	(365)	(606)	--	--	(35)	(660)	(641)	(184)	(521)	(292)	(521)	(203)	(933)	(686)	(933)
250	in	43 1/2	28 3/4	66 1/2	36	4 7/8	19 1/2	76 1/8	21 7/8	10 Oval	12 3/8	23 7/8	1/2	1/2	5 7/8	40 1/2	25 1/4	7 1/4	26	11 1/2	26	8	36 3/4	27	38 3/8
	mm	(1,105)	(730)	(1,689)	(914)	(124)	(495)	(1,934)	(556)	--	(314)	(606)	--	--	(149)	(1,029)	(641)	(184)	(660)	(292)	(660)	(203)	(933)	(686)	(975)
300	in	43 1/2	28 3/4	66 1/2	36	4 7/8	19 1/2	76 1/8	21 7/8	10 Oval	12 3/8	23 7/8	3/4	1/2	5 7/8	40 1/2	25 1/4	7 1/4	26	11 1/2	26	8	36 3/4	27	38 3/8
	mm	(1,105)	(730)	(1,689)	(914)	(124)	(495)	(1,934)	(556)	--	(314)	(606)	--	--	(149)	(1,029)	(641)	(184)	(660)	(292)	(660)	(203)	(933)	(686)	(975)
400	in	43 1/2	37	66 1/2	36	4 7/8	19 1/2	76 1/8	21 7/8	12 Oval	13	23 7/8	3/4	1/2	6 3/4	50 1/2	25 1/4	7 1/4	34 1/4	11 1/2	34 1/4	8	36 3/4	27	38 3/8
	mm	(1,105)	(940)	(1,689)	(914)	(124)	(495)	(1,934)	(556)	--	(330)	(606)	--	--	(171)	(1,283)	(641)	(184)	(870)	(292)	(870)	(203)	(933)	(686)	(975)

NOTES:

[C] Deduct 6-5/8" on Models 50, 75 & 100 when equipped with direct drive motor.
[D] Use with 4-point suspension without blower cabinet.
[E] When equipped with optional blower cabinet.
[F] Dimension includes a 3/4" flange on rear of blower cabinet.
[G] When equipped with optional duct flange.
[H] Use with 4-point suspension with blower cabinet.
[J] Contactor is standard on Models 300 & 400; optional on other sizes.
[K] Contactor location with optional 3 phase motors on Models 50, 75, 100 & 125.

CLEARANCES FROM COMBUSTIBLES

Required Clearances

Top & Flue Connector	**6”**
Sides	**18”**
Bottom	**12”**
(when supplied with optional downturn nozzle, bottom clearance is 42”). For service purposes, in standard units, bottom clearance exceeding 12” minimum is not required, but may be desirable.	
Rear	**24”**
For service purposes the back of the unit must have 24” clearance.	

Filters for Optional Blower Cabinet

Size	Qty.	Filter Size
25-125	1	20x20
165-200	1	16x25
	1	20x25
250-300	2	16x20
	2	20x20
400	2	16x25
	2	20x25
1” or 2” permanent filters		

REZNOR®
MODEL OH

Oil-Fired, Fan-Type, Unit Heater

DESCRIPTION

The Model OH Series oil-fired unit heaters is available in inputs of 118,000, 173,000, and 229,000 BTUH with 82% efficiency output. These completely packaged unit heaters burn No. 2 fuel oil.

Model OH heaters are equipped with a propeller fan. The fan is enclosed in an OSHA-type full safety fan guard.

All units feature a low-stress, 18 gauge steel exchanger and a heavy, 13 gauge combustion chamber with large, easily accessible, service panels. The oil burner assembly has a pressure-atomizing gun type burner that provides excellent flame retention and an integral fuel pump. The burner has an electric spark ignition system with an electronic cad-cell flame safety system with manual reset. All models have a flame observation port.

Standard features include fan and limit controls. The fan control prevents circulation of cold air at start-up and provides heat dissipation while the unit is hot after the burner shuts off. The safety limit control provides unit protection from high temperature caused by an airflow restriction or motor failure. All units are wired for 115 volt, 60 Hz power supply and can be controlled with a 24V thermostat.

Model OH oil-fired unit heaters are UL Listed for the United States, and are approved for installation in Canada by the Canadian Standards Association (CSA).
NOTE: Not certified for residential use.

STANDARD FEATURES

- Full automatic, thermostatically controlled operation
- Low stress, 18 gauge steel heat exchanger
- Heavy, 13 gauge steel combustion chamber
- 115/1/60 supply voltage
- 24-volt control voltage
- Atomizing power burner with single-stage fuel pump
- Electric spark ignition with cad-cell flame safety system
- Fan and limit safety controls
- Toggle disconnect switch
- Propeller fan
- Full safety fan guard
- Totally enclosed, permanently lubricated PSC motor with internal overload protection
- Built-in burner service tray
- Large easily accessible service panels for combustion chamber and heat exchanger maintenance
- Observation port
- Individually adjustable horizontal louvers
- 4-point suspension (1/2" threaded connectors)

OPTIONAL FEATURES - FIELD INSTALLED

- Vertical louvers
- Atomizing burner with two-stage fuel pump
- 30 GPH booster pump assembly with motor and two-stage fuel pump
- 70 GPH booster pump assembly with motor and two-stage fuel pump
- Booster pump pressure switch - used for intermittent pump operation in pressurized system
- Oil safety valve - recommended for all systems -- prevents siphoning and over pressure
- Draft Regulator - optional on UL listed Model
- Draft inducer relay
- Hanger kit to suspend from 1" pipe
- Outside combustion air adapter (not available with CSA models)
- Thermostat, single stage, 24-volt (40-90°F)
- Thermostat guard with locking cover
- Draft regulator - required on CSA Units

A UL Listed (or equivalent) oil supply tank must be used with Reznor® oil-fired heaters.
Model OT-250 fuel tank is available from Reznor.
- ***UL Listed***
- ***250 gallon capacity***
- ***Bench top***

For additional information, refer to Options and Accessories Section.

TECHNICAL DATA

Model OH

Size	OH95		OH140		OH190	
Thermal Input - BTUH (kW)	118,000	(34.6)	173,000	(50.7)	229,000	(67.1)
Thermal Output - BTUH (kW)	97,000	(28.4)	142,000	(41.6)	188,000	(55.1)
Nozzle Input - GPH (l/hr)	0.85	(3.22)	1.25	(4.73)	1.65	(6.25)
Full-Load Amps (115 volt)	6		7		7	
Fan Motor RPM	1,050		850		850	
Blower Motor RPM	--		--		--	
Motor HP	1/8		1/4		1/4	
Air Volume (Free Air) - CFM (M^3/hr)	2,000	(3,398)	3,200	(5,437)	3,200	(5,437)
Air Volume @ .25" ESP - CFM (M^3/hr)	--		--		--	
Throw at 9' (3M) Mntg Ht - ft (M)	50	(15)	65	(20)	65	(20)
Flue Diameter - inches	7		8		8	
Blower Size - inches	--		--		--	
Fan Diameter (inches) and Pitch (°)	18 - 33		22 - 36		22 - 36	
Approximate Net Wt (lbs)	290	(132)	345	(156)	345	(156)
Approximate Shipping Wt	340	(154)	405	(184)	405	(184)

DIMENSIONS

±1/16" (2mm)

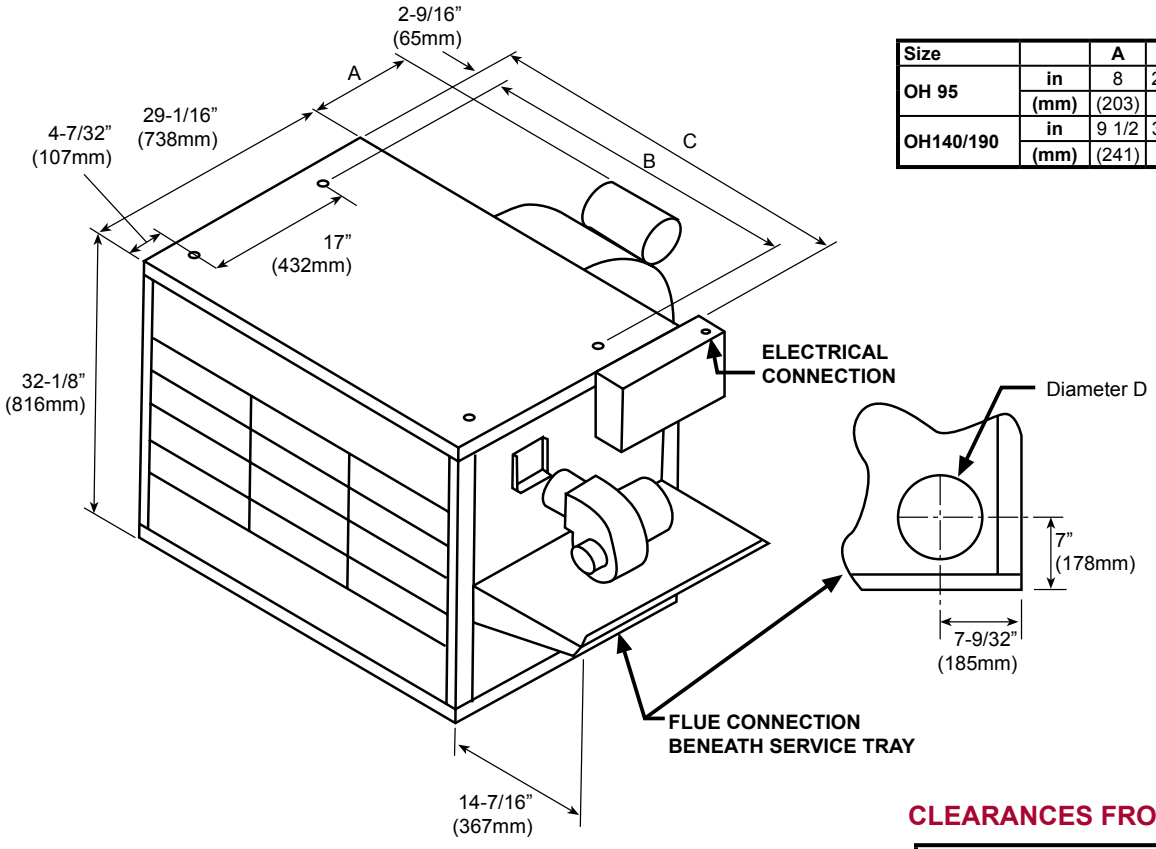

Size		A	B	C	D
OH 95	in	8	27 3/8	33	7
	(mm)	(203)	(695)	(838)	(178)
OH140/190	in	9 1/2	37 3/8	43	8
	(mm)	(241)	(949)	(1,092)	(203)

CLEARANCES FROM COMBUSTIBLES

Top	2"
Front	48"
Burner Side (for service)	18"
Side Opposite Burner (for service)	18"
Rear (for airflow) [A]	24"
Bottom	6"
Flue pipe - units with UL Label	18"
Flue pipe - units with CS Label	9"

[A] Rear service clearance should be measured from the fan motor.

Draft Regulator Requirement - **ALL** Model OH installations require a draft regulator (barometric draft control device) in the vent.

- Model OH with a CSA Label - A draft regulator is factory-supplied and must be installed.
- Model OH with a UL Label - a Factory-supplied draft regulator is available as an option (Option BV2 or DB1). Either the optional draft regulator or a field supplied, UL-approved draft regulator must be installed.

CLEARANCE: An 18" clearance is required from the top of the draft control to a combustible ceiling.

REZNOR®

Indirect Fired, Indoor, Downflow, Packaged Heater

Model LDAP

Model LDAP1200

All Model LDAP high bay packaged heaters are design certified by ETL for use in industrial and commercial installations.

These heaters must be installed in accordance with local building codes. In the absence of local codes, in the United States, the heater must be installed in accordance with the National Fuel Gas Code, ANSI Z223.1. A Canadian installation must be in accordance with the CSA B149 Installation Codes.

DESCRIPTION

Reznor®Model LDAP Series Packaged Downflow Heaters are available in three sizes - 400 MBH, 800 MBH, and 1200 MBH. Model LDAP 400 has one heat section; Model LDAP 800 has two heat sections; and Model LDAP 1200 has three heat sections. All Model LDAP heaters are 83% thermal efficient for use with either natural or propane gas.

Each heat section features the Reznor TCORE² heat exchanger and single burner combustion system. Other features include a single-stage gas valve, multi-try direct spark ignition with timed lockout, pressure switch to verify venter flow, resiliently isolated venter motor, resiliently isolated axial fan and motor assembly, a high temperature limit control, a destratification fan control, and a built-in disconnect switch. Operation is controlled through an integrated circuit board. The circuit board monitors heater operation and has LED diagnostic indicator lights to identify abnormalities in control functions.

Cabinet has four suspension points for hanging or may be wall mounted. Designed for ease of installation with an external 24-volt terminal strip and gas line connection.

Model LDAP heaters are certified by the ETL Testing Agency for commercial and industrial installations in United States and Canada.

STANDARD FEATURES

- 83% Thermal efficient
- 55°F Temperature rise range
- Patented* combustion system
- Titanium stabilized aluminized steel heat exchanger(s)
- 208 or 230 Single phase supply voltage
- Open fan motor(s) with internal overload protection
- Transformer for 24-volt controls
- Integrated circuit board(s) with diagnostic indicator lights
- Multi-try direct ignition with timed lockout
- Single-stage natural gas valve (field adjustable for operation to 10,000 ft / 3,045M elevation)
- Destratification adjustable fan control (air economizer)
- High temperature limit controls
- Vibration/noise isolated fan and venter motors
- 4-point Suspension
- Built-in disconnect switch
- External terminal strip for 24-volt wiring
- External gas connection
- Full fan guard(s)
- Ready for field connection to Building Automation Systems

OPTIONAL FEATURES - FACTORY INSTALLED

- Single-stage, propane gas valve (field adjustable to 10,000 ft / 3045M elevation)
- Two-stage natural or propane gas valve - Size 400 only
- 409 Stainless steel heat exchanger(s)

OPTIONAL FEATURES - FIELD INSTALLED

- Manual Shutoff Valve
- Multiple Heater Control
- High Altitude Adjustment Kit (above 6,000 ft./1,830 M)
- 4-Way Louvers
- Multiple Position Discharge Nozzles
- Vent Cap
- 1" Pipe Coupling (Swivel) Hanger Kit
- Thermostats

**** U.S. Patent No. 6,889,686***

TECHNICAL DATA

Model LDAP Size		400		800		1200	
Input Heating Capacity	btuh (kW/h)	400,000	(117.1)	800,000	(234.2)	1,200,000	(351.4)
Thermal Efficiency (%)		83		83		83	
Output Heating Capacity	btuh (kW/h)	332,000	(97.2)	664,000	(194.4)	996,000	(291.6)
Gas Connection (Inches)		1		1-1/4		1-1/4	
Vent Connection Diameter (Inches)		6		8		8	
Control Amps (24 volt)		1.0		2.0		3.0	
Full Load Amps (208 volt)		5.6		13.6		19.4	
Full Load Amps (230 volt)		5.5		12.8		18.5	
Normal Power Consumption @ 208V (watts)		1150		2448		3730	
Normal Power Consumption @ 230V (watts)		1230		2597		3959	
Discharge Air Temperature Rise (°F)		55		55		55	
Air Volume	cfm (M^3/min)	5,589	(158)	11,178	(317)	16,768	(475)
Discharge Air Opening Area	ft² (M^2)	3.67	(0.34)	7.35	(0.68)	11.02	(1.02)
Outlet Velocity	fpm (M/min)	1521	(464)	1521	(464)	1521	(464)
Air Volume (Destratification @ Medium Speed)	cfm (M^3/min)	4,650	(132)	9,300	(263)	13,950	(395)
Outlet Velocity (Destratification @ Medium Speed)	fpm (M/min)	1266	(386)	1266	(386)	1266	(386)
Air Volume (Destratification @ Low Speed)	cfm (M^3/min)	3,250	(92)	6,500	(184)	9,750	(276)
Outlet Velocity (Destratification @ Low Speed)	fpm	885	(270)	885	(270)	885	(270)
Fan Motor HP (Qty)		1 (1)		1 (2)		1 (3)	
Fan Motor RPM		1050		1050		1050	
Fan Diameter (Inches)		24		24		24	
Approximate Net Weight	lbs (kg)	375	(170)	805	(365)	1195	(542)
Approximate Ship Weight	lbs (kg)	672	(305)	1309	(594)	1847	(838)

CLEARANCES

Size	Top [A]		Flue Connector		Front (Access Panel)		Rear		Disconnect Side		Side		Bottom	
	inches	mm	inches	mm	inches	mm	inches	mm	inches	mm	inches	mm	inches	mm
400	12	(305)	6	(152)	18	(457)	2	(51)	18	(457)	2	(51)	60	(1,524)
800	12	(305)	6	(152)	18	(457)	2	(51)	18	(457)	2	(51)	60	(1,524)
1200	12	(305)	6	(152)	18	(457)	2	(51)	18	(457)	2	(51)	60	(1,524)

[A] Top clearance on size 400 measured from fan motor. Top clearance on sizes 800 and 1200 measured from flue collector.

DIMENSIONS

Model LDAP 400

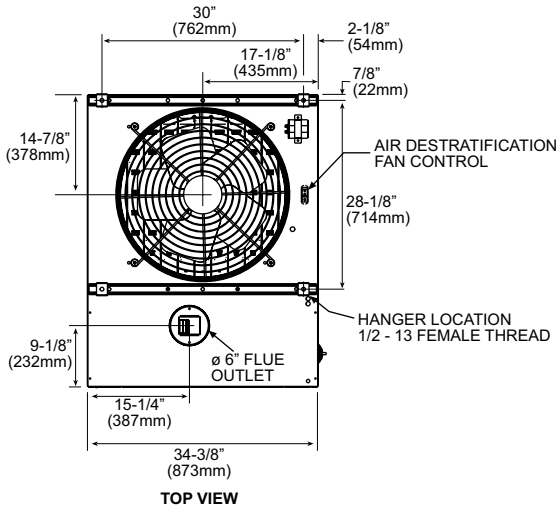

TOP VIEW

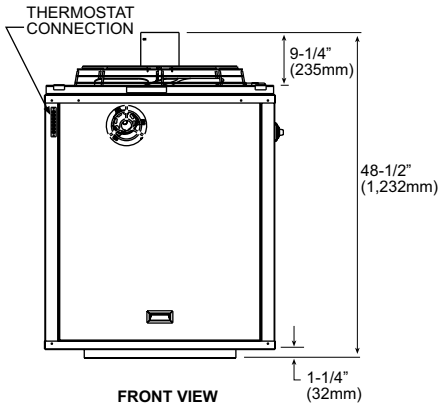

FRONT VIEW

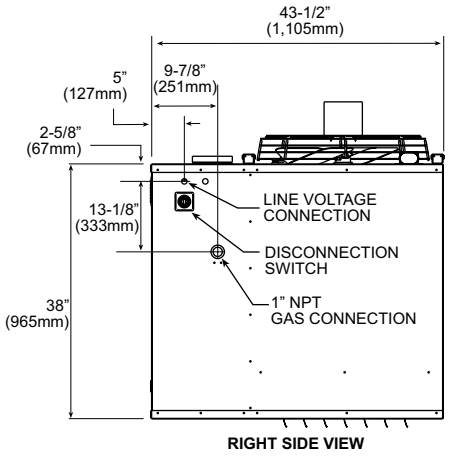

RIGHT SIDE VIEW

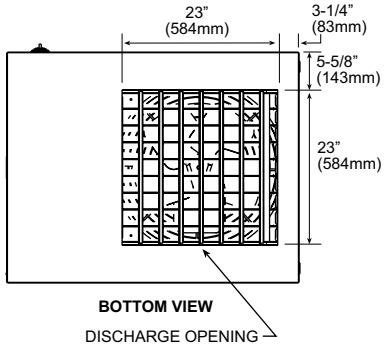

BOTTOM VIEW

DISCHARGE OPENING

More dimensions shown on following pages

DIMENSIONS Model LDAP 800 and 1200

Model LDAP 1200 is illustrated. Model LDAP 800 has two heat sections. Model LDAP 800 is the same as the layout shown without the middle section.

Size		A	B
800	inches	46	69
	mm	(1,168)	(1,753)
1200	inches	80	103 3/4
	mm	(2,032)	(2,635)

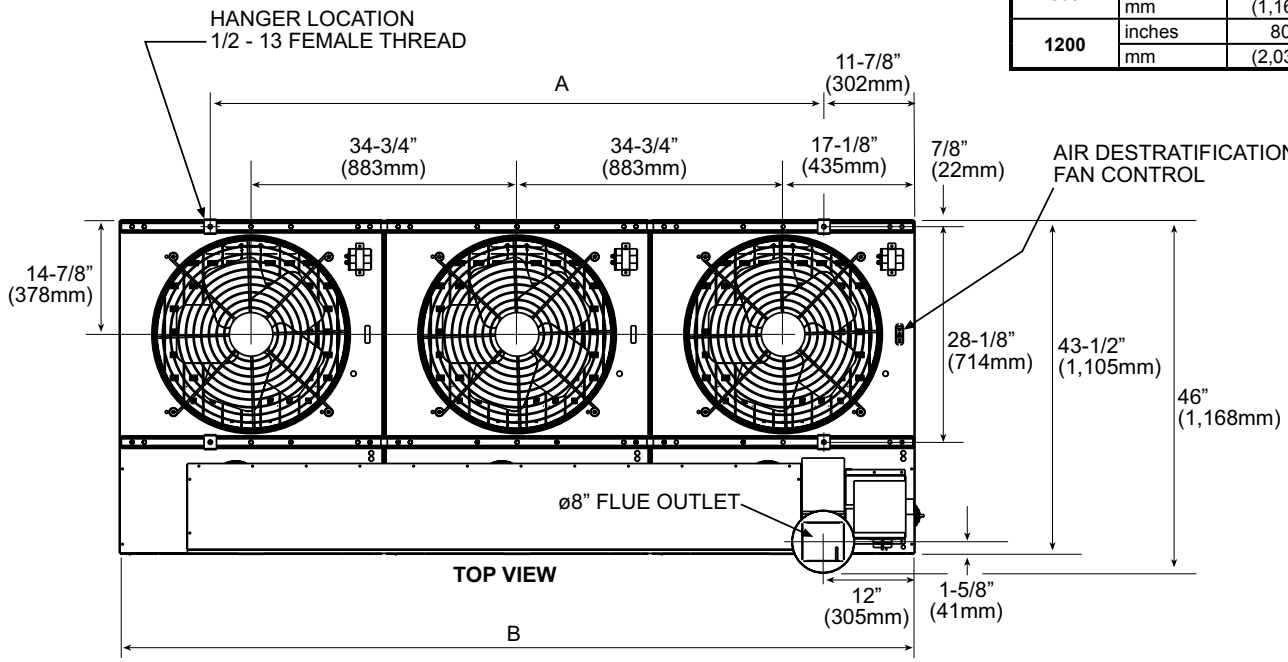

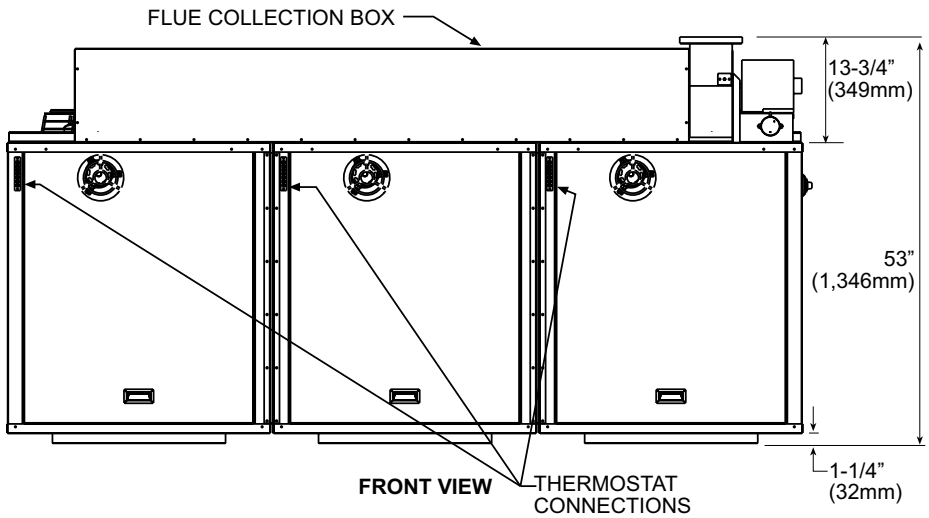

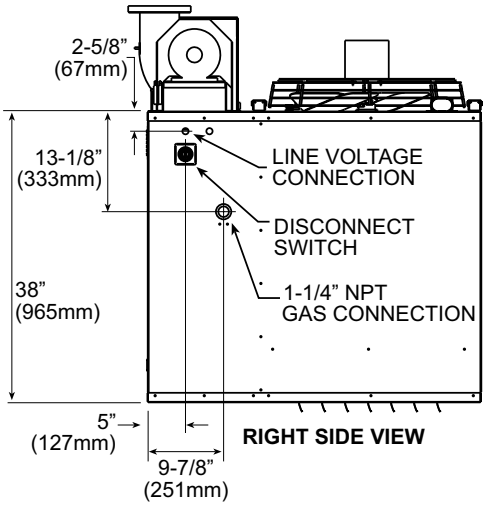

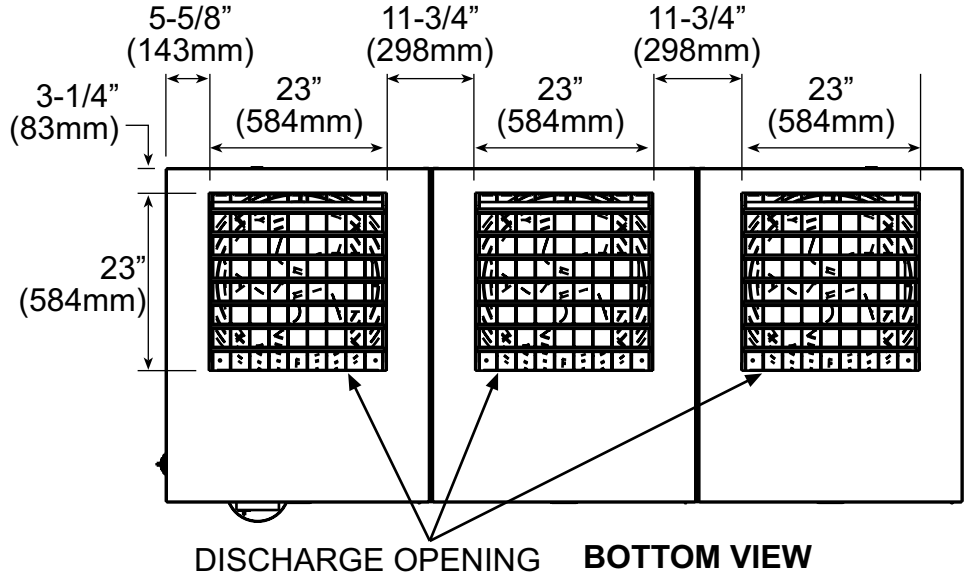

Dimensions for Optional Air Discharge Nozzle Shown in Accessory Section

REZNOR®

Throw/Floor Coverage

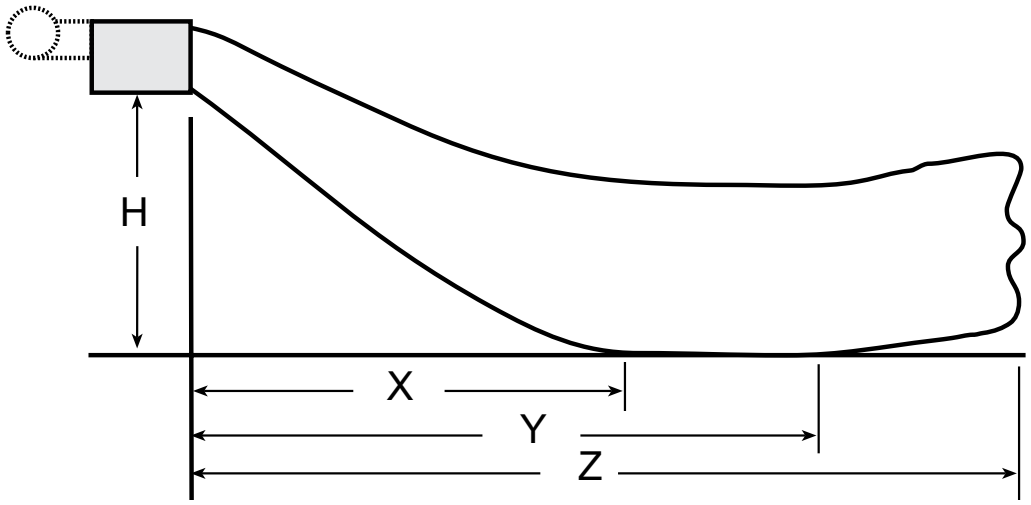

[H] Height measured from the floor to the bottom of the unit heater.
[X] Point where heated air from the heater reaches the floor.
[Y] Point where heated air tends to rise from the floor.
[Z] Point where the air velocity drops below 50 feet per minute (254 mm/sec).

Applies to both Model UDAS and Model UDAP

Dimension in feet

Size	30				45				60				75				100				125				150			
Mounting Height	X	Y	Z	Lvr. Angle	X	Y	Z	Lvr. Angle	X	Y	Z	Lvr. Angle	X	Y	Z	Lvr. Angle	X	Y	Z	Lvr. Angle	X	Y	Z	Lvr. Angle	X	Y	Z	Lvr. Angle
5	6	14	30	-21°	7	16	40	-20°	8	18	45	-16°	9	20	57	-14°	9	20	59	-18°	10	22	65	-14°	--	--	--	--
8	7	13	26	-39°	9	16	37	-34°	10	18	42	-29°	12	22	54	-25°	11	21	56	-28°	12	23	63	-24°	13	24	73	-26°
10	6	11	22	-52°	9	15	33	-43°	10	17	39	-37°	12	22	52	-32°	12	20	52	-36°	13	24	60	-30°	14	24	69	-32°
12	--	--	--	--	8	12	27	-55°	10	16	34	-46°	12	21	48	-39°	11	19	47	-44°	14	23	57	-36°	14	24	64	-39°
14	--	--	--	--	--	--	--	--	9	14	29	-56°	12	19	44	-46°	11	17	42	-51°	14	22	53	-43°	14	22	59	-45°
16	--	--	--	--	--	--	--	--	--	--	--	--	11	17	38	-54°	10	14	34	-58°	13	20	47	-50°	13	20	53	-51°
18	--	--	--	--	--	--	--	--	--	--	--	--	--	--	--	--	--	--	--	--	11	17	40	-57°	11	17	44	-58°
Size	**175**				**200**				**225**				**250**				**300**				**350**				**400**			
Mounting Height	X	Y	Z	Lvr. Angle	X	Y	Z	Lvr. Angle	X	Y	Z	Lvr. Angle	X	Y	Z	Lvr. Angle	X	Y	Z	Lvr. Angle	X	Y	Z	Lvr. Angle	X	Y	Z	Lvr. Angle
8	15	28	90	-22°	16	30	93	-20°	14	27	86	-24°	16	29	93	-21°	15	28	94	-24°	17	31	105	-20°	18	34	113	-17°
10	17	29	87	-27°	17	31	91	-25°	15	27	82	-30°	17	30	90	-26°	16	28	89	-29°	18	32	103	-25°	20	35	110	-21°
12	18	29	84	-32°	18	31	88	-30°	16	27	78	-35°	18	30	87	-31°	17	28	85	-34°	19	32	98	-30°	21	36	108	-25°
14	18	28	79	-37°	19	30	84	-34°	16	26	73	-41°	18	30	83	-36°	17	27	80	-40°	20	32	95	-34°	23	35	105	-29°
16	18	27	74	-42°	19	29	79	-39°	16	24	67	-47°	19	28	78	-41°	17	25	74	-45°	21	31	90	-38°	23	35	101	-33°
18	17	26	68	-48°	19	28	74	-44°	14	22	60	-53°	18	27	72	-46°	16	24	66	-51°	20	30	85	-43°	23	35	97	-37°

Dimension in metric

Size	30				45				60				75				100				125				150			
Mounting Height	X	Y	Z	Lvr. Angle	X	Y	Z	Lvr. Angle	X	Y	Z	Lvr. Angle	X	Y	Z	Lvr. Angle	X	Y	Z	Lvr. Angle	X	Y	Z	Lvr. Angle	X	Y	Z	Lvr. Angle
1.5	1.8	4.3	9.1	-21°	2.1	4.9	12.2	-20°	2.4	5.5	13.7	-16°	2.7	6.1	17.4	-14°	2.7	6.1	18.0	-18°	3.0	6.7	19.8	-14°	--	--	--	--
2.4	2.1	4.0	7.9	-39°	2.7	4.9	11.3	-34°	3.0	5.5	12.8	-29°	3.7	6.7	16.5	-25°	3.4	6.4	17.1	-28°	3.7	7.0	19.2	-24°	4.0	7.3	22.3	-26°
3.0	1.8	3.4	6.7	-52°	2.7	4.6	10.1	-43°	3.0	5.2	11.9	-37°	3.7	6.7	15.8	-32°	3.7	6.1	15.8	-36°	4.0	7.3	18.3	-30°	4.3	7.3	21.0	-32°
3.7	--	--	--	--	2.4	3.7	8.2	-55°	3.0	4.9	10.4	-46°	3.7	6.4	14.6	-39°	3.4	5.8	14.3	-44°	4.3	7.0	17.4	-36°	4.3	7.3	19.5	-39°
4.3	--	--	--	--	--	--	--	--	2.7	4.3	8.8	-56°	3.7	5.8	13.4	-46°	3.4	5.2	12.8	-51°	4.3	6.7	16.2	-43°	4.3	6.7	18.0	-45°
4.9	--	--	--	--	--	--	--	--	--	--	--	--	3.4	5.2	11.6	-54°	3.0	4.3	10.4	-58°	4.0	6.1	14.3	-50°	4.0	6.1	16.2	-51°
5.5	--	--	--	--	--	--	--	--	--	--	--	--	--	--	--	--	--	--	--	--	3.4	5.2	12.2	-57°	3.4	5.2	13.4	-58°
Size	**175**				**200**				**225**				**250**				**300**				**350**				**400**			
Mounting Height	X	Y	Z	Lvr. Angle	X	Y	Z	Lvr. Angle	X	Y	Z	Lvr. Angle	X	Y	Z	Lvr. Angle	X	Y	Z	Lvr. Angle	X	Y	Z	Lvr. Angle	X	Y	Z	Lvr. Angle
2.4	4.6	8.5	27.4	-22°	4.9	9.1	28.3	-20°	4.3	8.2	26.2	-24°	4.9	8.8	28.3	-21°	4.6	8.5	28.7	-24°	5.2	9.4	32.0	-20°	5.5	10.4	34.4	-17°
3.0	5.2	8.8	26.5	-27°	5.2	9.4	27.7	-25°	4.6	8.2	25.0	-30°	5.2	9.1	27.4	-26°	4.9	8.5	27.1	-29°	5.5	9.8	31.4	-25°	6.1	10.7	33.5	-21°
3.7	5.5	8.8	25.6	-32°	5.5	9.4	26.8	-30°	4.9	8.2	23.8	-35°	5.5	9.1	26.5	-31°	5.2	8.5	25.9	-34°	5.8	9.8	29.9	-30°	6.4	11.0	32.9	-25°
4.3	5.5	8.5	24.1	-37°	5.8	9.1	25.6	-34°	4.9	7.9	22.3	-41°	5.5	9.1	25.3	-36°	5.2	8.2	24.4	-40°	6.1	9.8	29.0	-34°	7.0	10.7	32.0	-29°
4.9	5.5	8.2	22.6	-42°	5.8	8.8	24.1	-39°	4.9	7.3	20.4	-47°	5.8	8.5	23.8	-41°	5.2	7.6	22.6	-45°	6.4	9.4	27.4	-38°	7.0	10.7	30.8	-33°
5.5	5.2	7.9	20.7	-48°	5.8	8.5	22.6	-44°	4.3	6.7	18.3	-53°	5.5	8.2	21.9	-46°	4.9	7.3	20.1	-51°	6.1	9.1	25.9	-43°	7.0	10.7	29.6	-37°

Louver angle listed in the table is relative to the top of the unit heater.

REZNOR®

Throw/Floor Coverage (cont'd)

Applies to both Model UDBS and Model UDBP

See illustration on previous page.

Dimension in feet

Low Speed																									75°F Rise			
Size	30				45				60				75				100				125				150			
Mounting Height	X	Y	Z	Louver Angle	X	Y	Z	Louver Angle	X	Y	Z	Louver Angle	X	Y	Z	Louver Angle	X	Y	Z	Louver Angle	X	Y	Z	Louver Angle	X	Y	Z	Louver Angle
5	7	15	38	-27°	7	17	44	-20°	11	26	78	-15°	11	24	74	-13°	10	23	74	-16°	10	22	69	-14°	--	--	--	--
8	7	13	32	-44°	9	17	40	-34°	14	26	76	-23°	13	26	72	-23°	13	25	72	-25°	12	24	65	-24°	9	16	44	-39°
10	7	11	25	-56°	9	16	37	-42°	15	27	72	-29°	15	25	69	-28°	14	25	69	-31°	13	24	62	-31°	9	14	38	-48°
12	--	--	--	--	9	14	31	-52°	16	26	70	-34°	15	25	65	-34°	14	24	66	-37°	14	23	58	-37°	7	11	30	-58°
14	--	--	--	--	--	--	--	--	16	25	65	-40°	15	24	62	-40°	14	23	62	-43°	14	21	54	-43°	--	--	--	--
16	--	--	--	--	--	--	--	--	15	24	60	-46°	15	23	56	-46°	14	21	57	-49°	12	19	47	-51°	--	--	--	--
18	--	--	--	--	--	--	--	--	14	22	53	-52°	14	21	50	-52°	12	18	51	-56°	11	17	40	-57°	--	--	--	--

Medium Speed																									60°F Rise			
Size	30				45				60				75				100				125				150			
Mounting Height	X	Y	Z	Louver Angle	X	Y	Z	Louver Angle	X	Y	Z	Louver Angle	X	Y	Z	Louver Angle	X	Y	Z	Louver Angle	X	Y	Z	Louver Angle	X	Y	Z	Louver Angle
5	7	16	43	-24°	9	21	60	-15°	12	28	91	-13°	11	27	84	-11°	11	27	86	-13°	12	29	96	-10°	--	--	--	--
8	9	16	38	-38°	11	23	57	-26°	16	30	89	-21°	15	29	82	-19°	15	28	83	-21°	16	31	94	-18°	13	24	74	-28°
10	8	14	33	-48°	13	22	54	-32°	17	30	86	-26°	16	30	79	-25°	17	29	81	-26°	18	32	92	-23°	13	22	62	-35°
12	8	12	28	-56°	13	21	51	-39°	18	31	83	-31°	17	30	77	-30°	17	29	78	-32°	19	32	89	-27°	13	21	57	-42°
14	--	--	--	--	12	20	46	-46°	18	30	79	-36°	18	29	74	-34°	18	29	74	-37°	20	32	87	-32°	12	19	51	-49°
16	--	--	--	--	11	17	40	-53°	19	29	75	-41°	18	28	70	-39°	18	27	70	-42°	20	31	83	-36°	11	16	43	-57°
18	--	--	--	--	--	--	--	--	17	28	69	-46°	18	26	65	-44°	17	26	64	-47°	20	30	78	-40°	--	--	--	--

High Speed																									45°F Rise			
Size	30				45				60				75				100				125				150			
Mounting Height	X	Y	Z	Louver Angle	X	Y	Z	Louver Angle	X	Y	Z	Louver Angle	X	Y	Z	Louver Angle	X	Y	Z	Louver Angle	X	Y	Z	Louver Angle	X	Y	Z	Louver Angle
5	8	19	51	-20°	11	28	81	-11°	13	30	105	-11°	12	30	97	-09°	13	32	110	-10°	13	33	113	-7°	--	--	--	--
8	10	19	48	-31°	15	29	79	-19°	17	33	103	-19°	17	33	95	-16°	18	34	108	-17°	19	36	111	-13°	18	32	107	-19°
10	11	19	44	-39°	16	30	78	-24°	19	34	100	-23°	19	33	94	-20°	20	36	106	-21°	21	37	109	-17°	19	34	104	-24°
12	11	17	40	-46°	17	30	75	-29°	21	35	98	-27°	20	34	92	-25°	22	36	104	-25°	23	39	107	-21°	21	34	102	-28°
14	9	15	33	-56°	18	30	72	-34°	22	34	95	-31°	21	34	89	-29°	23	36	102	-29°	24	39	105	-25°	22	34	98	-32°
16	--	--	--	--	19	29	69	-39°	23	33	91	-35°	22	33	86	-33°	24	36	99	-33°	25	40	103	-29°	22	33	94	-36°
18	--	--	--	--	18	28	64	-44°	21	33	86	-40°	22	33	83	-37°	23	36	95	-37°	26	39	101	-32°	21	33	89	-41°

75°F Rise																									80°F Rise			
Size	175				200				225				250				300				350				400			
Mounting Height	X	Y	Z	Louver Angle	X	Y	Z	Louver Angle	X	Y	Z	Louver Angle	X	Y	Z	Louver Angle	X	Y	Z	Louver Angle	X	Y	Z	Louver Angle	X	Y	Z	Louver Angle
8	12	22	69	-30°	13	24	76	-27°	13	24	82	-29°	14	27	95	-26°	12	21	70	-32°	13	25	82	-27°	15	28	95	-24°
10	12	22	65	-37°	14	24	72	-33°	12	21	66	-38°	16	27	91	-31°	12	21	65	-39°	14	25	77	-33°	16	28	92	-29°
12	13	21	59	-43°	14	23	68	-39°	12	20	60	-45°	16	27	86	-37°	12	19	58	-47°	14	24	72	-40°	17	28	88	-34°
14	11	19	52	-51°	14	22	62	-46°	11	18	53	-52°	16	25	80	-43°	10	17	50	-55°	14	22	66	-46°	17	27	82	-39°
16	--	--	--	--	12	20	53	-53°	--	--	--	--	16	23	73	-49°	--	--	--	--	13	20	57	-53°	17	26	76	-45°
18	--	--	--	--	--	--	--	--	--	--	--	--	14	21	64	-56°	--	--	--	--	--	--	--	--	16	24	69	-50°

60°F Rise																									70°F Rise			
Size	175				200				225				250				300				350				400			
Mounting Height	X	Y	Z	Louver Angle	X	Y	Z	Louver Angle	X	Y	Z	Louver Angle	X	Y	Z	Louver Angle	X	Y	Z	Louver Angle	X	Y	Z	Louver Angle	X	Y	Z	Louver Angle
8	15	29	92	-22°	16	31	100	-21°	16	29	100	-24°	19	34	127	-20°	16	28	100	-24°	18	33	119	-20°	17	31	111	-21°
10	16	29	89	-28°	18	31	97	-25°	16	30	96	-29°	20	35	123	-24°	17	29	96	-29°	19	34	116	-25°	18	32	107	-26°
12	17	29	85	-33°	19	31	93	-30°	17	30	92	-34°	21	36	120	-28°	18	29	92	-34°	21	34	113	-29°	19	32	103	-31°
14	17	28	80	-38°	20	30	89	-34°	18	28	87	-38°	22	35	116	-32°	18	28	87	-39°	22	34	109	-33°	20	31	99	-35°
16	17	27	75	-43°	20	29	84	-39°	18	27	80	-44°	23	35	111	-37°	18	27	81	-44°	22	33	104	-37°	20	31	93	-40°
18	17	25	69	-48°	19	29	79	-44°	17	26	74	-49°	23	34	106	-41°	17	25	73	-50°	22	32	98	-41°	20	29	88	-44°

45°F Rise																									50°F Rise			
Size	175				200				225				250				300				350				400			
Mounting Height	X	Y	Z	Louver Angle	X	Y	Z	Louver Angle	X	Y	Z	Louver Angle	X	Y	Z	Louver Angle	X	Y	Z	Louver Angle	X	Y	Z	Louver Angle	X	Y	Z	Louver Angle
8	22	41	146	-15°	23	43	157	-13°	23	43	168	-16°	26	48	198	-14°	21	39	146	-17°	24	45	169	-14°	24	44	169	-14°
10	24	43	144	-19°	25	46	155	-17°	26	45	166	-19°	29	50	196	-17°	23	41	143	-21°	26	47	167	-18°	26	46	167	-17°
12	26	43	141	-22°	27	47	152	-20°	28	45	163	-22°	31	52	194	-20°	25	42	140	-25°	28	48	165	-21°	28	48	165	-20°
14	28	44	137	-25°	29	48	150	-23°	30	46	160	-25°	32	54	191	-22°	26	42	137	-28°	30	49	162	-24°	31	48	162	-23°
16	29	44	134	-28°	31	48	147	-26°	31	47	157	-29°	34	53	189	-25°	27	42	133	-31°	32	48	159	-26°	32	49	159	-26°
18	29	44	131	-32°	31	49	144	-29°	31	47	153	-32°	34	54	185	-28°	28	41	129	-34°	33	49	156	-29°	32	49	156	-29°

REZNOR®

See illustration on page 25.

Throw/Floor Coverage (cont'd)

Applies to both Model UDBS and Model UDBP

Dimension in metric

	Low Speed																						42°C Rise			
Size	30				45				60				75				100				125				150			
Mounting Height	X	Y	Z	Louver Angle	X	Y	Z	Louver Angle	X	Y	Z	Louver Angle	X	Y	Z	Louver Angle	X	Y	Z	Louver Angle	X	Y	Z	Louver Angle	X	Y	Z	Louver Angle
1.5	2.1	4.6	11.6	-27°	2.1	5.2	13.4	-20°	3.4	7.9	23.8	-15°	3.4	7.3	22.6	-13°	3.0	7.0	22.6	-16°	3.0	6.7	21.0	-14°	--	--	--	--
2.4	2.1	4.0	9.8	-44°	2.7	5.2	12.2	-34°	4.3	7.9	23.2	-23°	4.0	7.9	21.9	-23°	4.0	7.6	21.9	-25°	3.7	7.3	19.8	-24°	2.7	4.9	13.4	-39°
3.0	2.1	3.4	7.6	-56°	2.7	4.9	11.3	-42°	4.6	8.2	21.9	-29°	4.6	7.6	21.0	-28°	4.3	7.6	21.0	-31°	4.0	7.3	18.9	-31°	2.7	4.3	11.6	-48°
3.7	--	--	--	--	2.7	4.3	9.4	-52°	4.9	7.9	21.3	-34°	4.6	7.6	19.8	-34°	4.3	7.3	20.1	-37°	4.3	7.0	17.7	-37°	2.1	3.4	9.1	-58°
4.3	--	--	--	--	--	--	--	--	4.9	7.6	19.8	-40°	4.6	7.3	18.9	-40°	4.3	7.0	18.9	-43°	4.3	6.4	16.5	-43°	--	--	--	--
4.9	--	--	--	--	--	--	--	--	4.6	7.3	18.3	-46°	4.6	7.0	17.1	-46°	4.3	6.4	17.4	-49°	3.7	5.8	14.3	-51°	--	--	--	--
5.5	--	--	--	--	--	--	--	--	4.3	6.7	16.2	-52°	4.3	6.4	15.2	-52°	3.7	5.5	15.5	-56°	3.4	5.2	12.2	-57°	--	--	--	--
	Medium Speed																						33°C Rise			
Size	30				45				60				75				100				125				150			
Mounting Height	X	Y	Z	Louver Angle	X	Y	Z	Louver Angle	X	Y	Z	Louver Angle	X	Y	Z	Louver Angle	X	Y	Z	Louver Angle	X	Y	Z	Louver Angle	X	Y	Z	Louver Angle
1.5	2.1	4.9	13.1	-24°	2.7	6.4	18.3	-15°	3.7	8.5	27.7	-13°	3.4	8.2	25.6	-11°	3.4	8.2	26.2	-13°	3.7	8.8	29.3	-10°	--	--	--	--
2.4	2.7	4.9	11.6	-38°	3.4	7.0	17.4	-26°	4.9	9.1	27.1	-21°	4.6	8.8	25.0	-19°	4.6	8.5	25.3	-21°	4.9	9.4	28.7	-18°	4.0	7.3	22.6	-28°
3.0	2.4	4.3	10.1	-48°	4.0	6.7	16.5	-32°	5.2	9.1	26.2	-26°	4.9	9.1	24.1	-25°	5.2	8.8	24.7	-26°	5.5	9.8	28.0	-23°	4.0	6.7	18.9	-35°
3.7	2.4	3.7	8.5	-56°	4.0	6.4	15.5	-39°	5.5	9.4	25.3	-31°	5.2	9.1	23.5	-30°	5.2	8.8	23.8	-32°	5.8	9.8	27.1	-27°	4.0	6.4	17.4	-42°
4.3	--	--	--	--	3.7	6.1	14.0	-46°	5.5	9.1	24.1	-36°	5.5	8.8	22.6	-34°	5.5	8.8	22.6	-37°	6.1	9.8	26.5	-32°	3.7	5.8	15.5	-49°
4.9	--	--	--	--	3.4	5.2	12.2	-53°	5.8	8.8	22.9	-41°	5.5	8.5	21.3	-39°	5.5	8.2	21.3	-42°	6.1	9.4	25.3	-36°	3.4	4.9	13.1	-57°
5.5	--	--	--	--	--	--	--	--	5.2	8.5	21.0	-46°	5.5	7.9	19.8	-44°	5.2	7.9	19.5	-47°	6.1	9.1	23.8	-40°	--	--	--	--
	High Speed																						25°C Rise			
Size	30				45				60				75				100				125				150			
Mounting Height	X	Y	Z	Louver Angle	X	Y	Z	Louver Angle	X	Y	Z	Louver Angle	X	Y	Z	Louver Angle	X	Y	Z	Louver Angle	X	Y	Z	Louver Angle	X	Y	Z	Louver Angle
1.5	2.4	5.8	15.5	-20°	3.4	8.5	24.7	-11°	4.0	9.1	32.0	-11°	3.7	9.1	29.6	-09°	4.0	9.8	33.5	-10°	4.0	10.1	34.4	-7°	--	--	--	--
2.4	3.0	5.8	14.6	-31°	4.6	8.8	24.1	-19°	5.2	10.1	31.4	-19°	5.2	10.1	29.0	-16°	5.5	10.4	32.9	-17°	5.8	11.0	33.8	-13°	5.5	9.8	32.6	-19°
3.0	3.4	5.8	13.4	-39°	4.9	9.1	23.8	-24°	5.8	10.4	30.5	-23°	5.8	10.1	28.7	-20°	6.1	11.0	32.3	-21°	6.4	11.3	33.2	-17°	5.8	10.4	31.7	-24°
3.7	3.4	5.2	12.2	-46°	5.2	9.1	22.9	-29°	6.4	10.7	29.9	-27°	6.1	10.4	28.0	-25°	6.7	11.0	31.7	-25°	7.0	11.9	32.6	-21°	6.4	10.4	31.1	-28°
4.3	2.7	4.6	10.1	-56°	5.5	9.1	21.9	-34°	6.7	10.4	29.0	-31°	6.4	10.4	27.1	-29°	7.0	11.0	31.1	-29°	7.3	11.9	32.0	-25°	6.7	10.4	29.9	-32°
4.9	--	--	--	--	5.8	8.8	21.0	-39°	7.0	10.1	27.7	-35°	6.7	10.1	26.2	-33°	7.3	11.0	30.2	-33°	7.6	12.2	31.4	-29°	6.7	10.1	28.7	-36°
5.5	--	--	--	--	5.5	8.5	19.5	-44°	6.4	10.1	26.2	-40°	6.7	10.1	25.3	-37°	7.0	11.0	29.0	-37°	7.9	11.9	30.8	-32°	6.4	10.1	27.1	-41°
	42°C Rise																						44°C Rise			
Size	175				200				225				250				300				350				400			
Mounting Height	X	Y	Z	Louver Angle	X	Y	Z	Louver Angle	X	Y	Z	Louver Angle	X	Y	Z	Louver Angle	X	Y	Z	Louver Angle	X	Y	Z	Louver Angle	X	Y	Z	Louver Angle
2.4	3.7	6.7	21.0	-30°	4.0	7.3	23.2	-27°	4.0	7.3	25.0	-29°	4.3	8.2	29.0	-26°	3.7	6.4	21.3	-32°	4.0	7.6	25.0	-27°	4.6	8.5	29.0	-26°
3.0	3.7	6.7	19.8	-37°	4.3	7.3	21.9	-33°	3.7	6.4	20.1	-38°	4.9	8.2	27.7	-31°	3.7	6.4	19.8	-39°	4.3	7.6	23.5	-33°	4.9	8.5	28.0	-31°
3.7	4.0	6.4	18.0	-43°	4.3	7.0	20.7	-39°	3.7	6.1	18.3	-45°	4.9	8.2	26.2	-37°	3.7	5.8	17.7	-47°	4.3	7.3	21.9	-40°	5.2	8.5	26.8	-37°
4.3	3.4	5.8	15.8	-51°	4.3	6.7	18.9	-46°	3.4	5.5	16.2	-52°	4.9	7.6	24.4	-43°	3.0	5.2	15.2	-55°	4.3	6.7	20.1	-46°	5.2	8.2	25.0	-43°
4.9	--	--	--	--	3.7	6.1	16.2	-53°	--	--	--	--	4.9	7.0	22.3	-49°	--	--	--	--	4.0	6.1	17.4	-53°	5.2	7.9	23.2	-49°
5.5	--	--	--	--	--	--	--	--	--	--	--	--	4.3	6.4	19.5	-56°	--	--	--	--	--	--	--	--	4.9	7.3	21.0	-56°
	33°C Rise																						39°C Rise			
Size	175				200				225				250				300				350				400			
Mounting Height	X	Y	Z	Louver Angle	X	Y	Z	Louver Angle	X	Y	Z	Louver Angle	X	Y	Z	Louver Angle	X	Y	Z	Louver Angle	X	Y	Z	Louver Angle	X	Y	Z	Louver Angle
2.4	4.6	8.8	28.0	-22°	4.9	9.4	30.5	-21°	4.9	8.8	30.5	-24°	5.8	10.4	38.7	-20°	4.9	8.5	30.5	-24°	5.5	10.1	36.3	-20°	5.2	9.4	33.8	-21°
3.0	4.9	8.8	27.1	-28°	5.5	9.4	29.6	-25°	4.9	9.1	29.3	-29°	6.1	10.7	37.5	-24°	5.2	8.8	29.3	-29°	5.8	10.4	35.4	-25°	5.5	9.8	32.6	-26°
3.7	5.2	8.8	25.9	-33°	5.8	9.4	28.3	-30°	5.2	9.1	28.0	-34°	6.4	11.0	36.6	-28°	5.5	8.8	28.0	-34°	6.4	10.4	34.4	-29°	5.8	9.8	31.4	-31°
4.3	5.2	8.5	24.4	-38°	6.1	9.1	27.1	-34°	5.5	8.5	26.5	-38°	6.7	10.7	35.4	-32°	5.5	8.5	26.5	-39°	6.7	10.4	33.2	-33°	6.1	9.4	30.2	-35°
4.9	5.2	8.2	22.9	-43°	6.1	8.8	25.6	-39°	5.5	8.2	24.4	-44°	7.0	10.7	33.8	-37°	5.5	8.2	24.7	-44°	6.7	10.1	31.7	-37°	6.1	9.4	28.3	-40°
5.5	5.2	7.6	21.0	-48°	5.8	8.8	24.1	-44°	5.2	7.9	22.6	-49°	7.0	10.4	32.3	-41°	5.2	7.6	22.3	-50°	6.7	9.8	29.9	-41°	6.1	8.8	26.8	-44°
	25°C Rise																						28°C Rise			
Size	175				200				225				250				300				350				400			
Mounting Height	X	Y	Z	Louver Angle	X	Y	Z	Louver Angle	X	Y	Z	Louver Angle	X	Y	Z	Louver Angle	X	Y	Z	Louver Angle	X	Y	Z	Louver Angle	X	Y	Z	Louver Angle
2.4	6.7	12.5	44.5	-15°	7.0	13.1	47.9	-13°	7.0	13.1	51.2	-16°	7.9	14.6	60.4	-14°	6.4	11.9	44.5	-17°	7.3	13.7	51.5	-14°	7.3	13.4	51.5	-14°
3.0	7.3	13.1	43.9	-19°	7.6	14.0	47.2	-17°	7.9	13.7	50.6	-19°	8.8	15.2	59.7	-17°	7.0	12.5	43.6	-21°	7.9	14.3	50.9	-18°	7.9	14.0	50.9	-17°
3.7	7.9	13.1	43.0	-22°	8.2	14.3	46.3	-20°	8.5	13.7	49.7	-22°	9.4	15.8	59.1	-20°	7.6	12.8	42.7	-25°	8.5	14.6	50.3	-21°	8.5	14.6	50.3	-20°
4.3	8.5	13.4	41.8	-25°	8.8	14.6	45.7	-23°	9.1	14.0	48.8	-25°	9.8	16.5	58.2	-22°	7.9	12.8	41.8	-28°	9.1	14.9	49.4	-24°	9.4	14.6	49.4	-23°
4.9	8.8	13.4	40.8	-28°	9.4	14.6	44.8	-26°	9.4	14.3	47.9	-29°	10.4	16.2	57.6	-25°	8.2	12.8	40.5	-31°	9.8	14.6	48.5	-26°	9.8	14.9	48.5	-26°
5.5	8.8	13.4	39.9	-32°	9.4	14.9	43.9	-29°	9.4	14.3	46.6	-32°	10.4	16.5	56.4	-28°	8.5	12.5	39.3	-34°	10.1	14.9	47.5	-29°	9.8	14.9	47.5	-29°

Throw/Floor Coverage (cont'd)

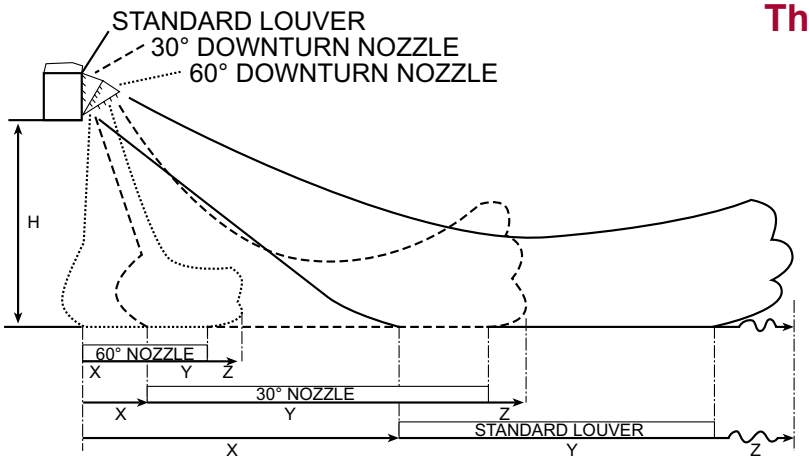

Applies to Model F Sizes 125-400

[H] Height measured from the floor to the bottom of the unit heater.
[X] Point where heated air from the heater reaches the floor.
[Y] Point where heated air tends to rise from the floor.
[Z] Point where the air velocity drops below 50 feet per minute (254 mm/sec).

NOTES: ***Data based on 80°F entering air and 60°F rise through the unit. Standard louvers set at maximum deflection are effective as indicated when ceiling height above heater is not over 4 ft. For higher mounting height or where spot heating is required, choose outlet and mounting height giving coverage to floor. Mounting close to the ceiling provides maximum heat utilization.***

Dimension in feet

With Standard Horizontal Louvers

Mounting Height	F125			F165			F200			F250			F300			F400		
	X	Y	Z	X	Y	Z	X	Y	Z	X	Y	Z	X	Y	Z	X	Y	Z
8	14	24	65	14	35	75	13	38	83	12	44	94	12	36	105	12	55	118
10	16	22	58	16	32	72	15	36	78	15	40	88	14	38	96	14	53	112
12	18	20	54	18	30	66	17	34	72	17	38	84	16	35	90	16	49	108
14	--	--	--	--	--	--	20	31	68	19	33	77	18	30	85	18	45	100
16	--	--	--	--	--	--	--	--	--	22	30	72	20	27	80	20	40	92
18	--	--	--	--	--	--	--	--	--	--	--	--	--	--	--	23	35	85

With Downturn Nozzle with 25-65° Range of Air Deflection (30° Nozzle)

Mounting Height	F125			F165			F200			F250			F300			F400		
	X	Y	Z	X	Y	Z	X	Y	Z	X	Y	Z	X	Y	Z	X	Y	Z
10	10	22	28	10	24	33	10	31	45	8	40	53	8	38	51	--	--	--
12	13	18	26	12	22	30	12	29	43	10	38	50	10	36	48	10	50	70
14	16	16	22	15	20	25	14	26	40	12	36	47	13	34	44	12	47	66
16	--	--	--	--	--	--	16	23	36	14	33	42	15	31	40	14	43	62
18	--	--	--	--	--	--	18	20	30	16	28	36	18	26	34	16	38	58
20	--	--	--	--	--	--	--	--	--	--	--	--	--	--	--	18	34	53
22	--	--	--	--	--	--	--	--	--	--	--	--	--	--	--	21	30	46

With Downturn Nozzle with 50-90° Range of Air Deflection (60° Nozzle)

Mounting Height	F125			F165			F200			F250			F300			F400		
	X	Y	Z	X	Y	Z	X	Y	Z	X	Y	Z	X	Y	Z	X	Y	Z
12	0	8	20	0	8	22	0	8	25	0	12	30	0	10	28	--	--	--
16	0	10	18	0	10	20	0	10	23	0	14	28	0	12	26	0	12	32
20	0	14	16	0	14	18	0	12	21	0	16	26	0	14	24	0	14	30
24	--	--	--	--	--	--	0	14	18	0	18	24	0	16	20	0	16	28
28	--	--	--	--	--	--	--	--	--	--	--	--	--	--	--	0	18	26
32	--	--	--	--	--	--	--	--	--	--	--	--	--	--	--	0	20	24
36	--	--	--	--	--	--	--	--	--	--	--	--	--	--	--	0	22	22

Dimension in metric

With Standard Horizontal Louvers

Mounting Height	F125			F165			F200			F250			F300			F400		
	X	Y	Z	X	Y	Z	X	Y	Z	X	Y	Z	X	Y	Z	X	Y	Z
2.4	4.3	7.3	19.8	4.3	10.7	22.9	4.0	11.6	25.3	3.7	13.4	28.7	3.7	11.0	32.0	3.7	16.8	36.0
3.0	4.9	6.7	17.7	4.9	9.8	21.9	4.6	11.0	23.8	4.6	12.2	26.8	4.3	11.6	29.3	4.3	16.2	34.1
3.7	5.5	6.1	16.5	5.5	9.1	20.1	5.2	10.4	21.9	5.2	11.6	25.6	4.9	10.7	27.4	4.9	14.9	32.9
4.3	--	--	--	--	--	--	6.1	9.4	20.7	5.8	10.1	23.5	5.5	9.1	25.9	5.5	13.7	30.5
4.9	--	--	--	--	--	--	--	--	--	6.7	9.1	21.9	6.1	8.2	24.4	6.1	12.2	28.0
5.5	--	--	--	--	--	--	--	--	--	--	--	--	--	--	--	7.0	10.7	25.9

With Downturn Nozzle with 25-65° Range of Air Deflection (30° Nozzle)

Mounting Height	F125			F165			F200			F250			F300			F400		
	X	Y	Z	X	Y	Z	X	Y	Z	X	Y	Z	X	Y	Z	X	Y	Z
3.0	3.0	6.7	8.5	3.0	7.3	10.1	3.0	9.4	13.7	2.4	12.2	16.2	2.4	11.6	15.5	--	--	--
3.7	4.0	5.5	7.9	3.7	6.7	9.1	3.7	8.8	13.1	3.0	11.6	15.2	3.0	11.0	14.6	3.0	15.2	21.3
4.3	4.9	4.9	6.7	4.6	6.1	7.6	4.3	7.9	12.2	3.7	11.0	14.3	4.0	10.4	13.4	3.7	14.3	20.1
4.9	--	--	--	--	--	--	4.9	7.0	11.0	4.3	10.1	12.8	4.6	9.4	12.2	4.3	13.1	18.9
5.5	--	--	--	--	--	--	5.5	6.1	9.1	4.9	8.5	11.0	5.5	7.9	10.4	4.9	11.6	17.7
6.1	--	--	--	--	--	--	--	--	--	--	--	--	--	--	--	5.5	10.4	16.2
6.7	--	--	--	--	--	--	--	--	--	--	--	--	--	--	--	6.4	9.1	14.0

With Downturn Nozzle with 50-90° Range of Air Deflection (60° Nozzle)

Mounting Height	F125			F165			F200			F250			F300			F400		
	X	Y	Z	X	Y	Z	X	Y	Z	X	Y	Z	X	Y	Z	X	Y	Z
3.7	0.0	2.4	6.1	0.0	2.4	6.7	0.0	2.4	7.6	0.0	3.7	9.1	0.0	3.0	8.5	--	--	--
4.9	0.0	3.0	5.5	0.0	3.0	6.1	0.0	3.0	7.0	0.0	4.3	8.5	0.0	3.7	7.9	0.0	3.7	9.8
6.1	0.0	4.3	4.9	0.0	4.3	5.5	0.0	3.7	6.4	0.0	4.9	7.9	0.0	4.3	7.3	0.0	4.3	9.1
7.3	--	--	--	--	--	--	0.0	4.3	5.5	0.0	5.5	7.3	0.0	4.9	6.1	0.0	4.9	8.5
8.5	--	--	--	--	--	--	--	--	--	--	--	--	--	--	--	0.0	5.5	7.9
9.8	--	--	--	--	--	--	--	--	--	--	--	--	--	--	--	0.0	6.1	7.3
11.0	--	--	--	--	--	--	--	--	--	--	--	--	--	--	--	0.0	6.7	6.7

REZNOR®

Throw/Floor Coverage (cont'd)

Applies to Model B Sizes 125-400
Floor Coverage with 50-90 degree
Variable Air Deflection Downturn Nozzle

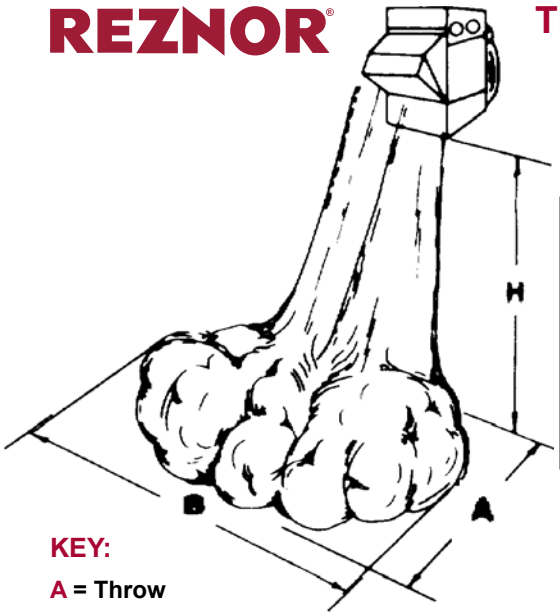

KEY:

A = Throw

B = Spread (Side to side coverage with standard louvers)

H = Mounting Height

Blower Model	CFM	Mounting Height - H															
		12 ft		16 ft		20 ft		24 ft		28 ft		32 ft		36 ft		40 ft	
		A	B	A	B	A	B	A	B	A	B	A	B	A	B	A	B
125	1545	20	22	18	20	16	18	--	--	--	--	--	--	--	--	--	--
165	2090	24	26	22	24	20	22	--	--	--	--	--	--	--	--	--	--
200	2470	--	--	26	28	24	26	20	22	--	--	--	--	--	--	--	--
250	3090	--	--	30	32	28	30	24	26	--	--	--	--	--	--	--	--
300	3710	--	--	--	--	32	34	30	32	28	30	26	28	24	26	--	--
400	4950	--	--	--	--	36	38	34	36	32	34	30	32	28	30	24	26

Blower Model	M^3/hr	Mounting Height - H															
		3.7M		4.9M		6.1M		7.3M		8.5M		9.8M		11.0M		12.2M	
		A	B	A	B	A	B	A	B	A	B	A	B	A	B	A	B
125	2625	6.1	6.7	5.5	6.1	4.9	5.5	--	--	--	--	--	--	--	--	--	--
165	3551	7.3	7.9	6.7	7.3	6.1	6.7	--	--	--	--	--	--	--	--	--	--
200	4196	--	--	7.9	8.5	7.3	7.9	6.1	6.7	--	--	--	--	--	--	--	--
250	5250	--	--	9.1	9.8	8.5	9.1	7.3	7.9	--	--	--	--	--	--	--	--
300	6303	--	--	--	--	9.8	10.4	9.1	9.8	8.5	9.1	7.9	8.5	7.3	7.9	--	--
400	8410	--	--	--	--	11.0	11.6	10.4	11.0	9.8	10.4	9.1	9.8	8.5	9.1	7.3	7.9

NOTES: ***Data based on 80°F entering air temperature and 60°F rise through the unit. Standard horizontal louver set for maximum down deflection. Table and drawing show approximate floor coverage at various mounting heights. NOTE that throw "A" and sideward spread "B" are increased as mounting height is reduced, due to floor bounce effect. Conversely the floor coverage reduces as mounting height increases. Horizontal louvers can be used to spread throw area "A" forward from the heater, and vertical louvers can be used to increase sideward spread "B". Vertical louvers set at maximum deflection will increase spread "B" approximately 10 feet, but will reduce maximum mounting height 4 feet. EXAMPLE: B200 at 20 ft. mounting height with standard louver setting gives a floor coverage of "A" = 24' x "B" = 26'. Using vertical louvers set at maximum sideward spread, the maximum mounting height would be 16 feet, and the floor coverage would be "A" = 26' and "B" = 28' plus 10' or 38'.***

Applies to Model LDAP
(in heat mode)

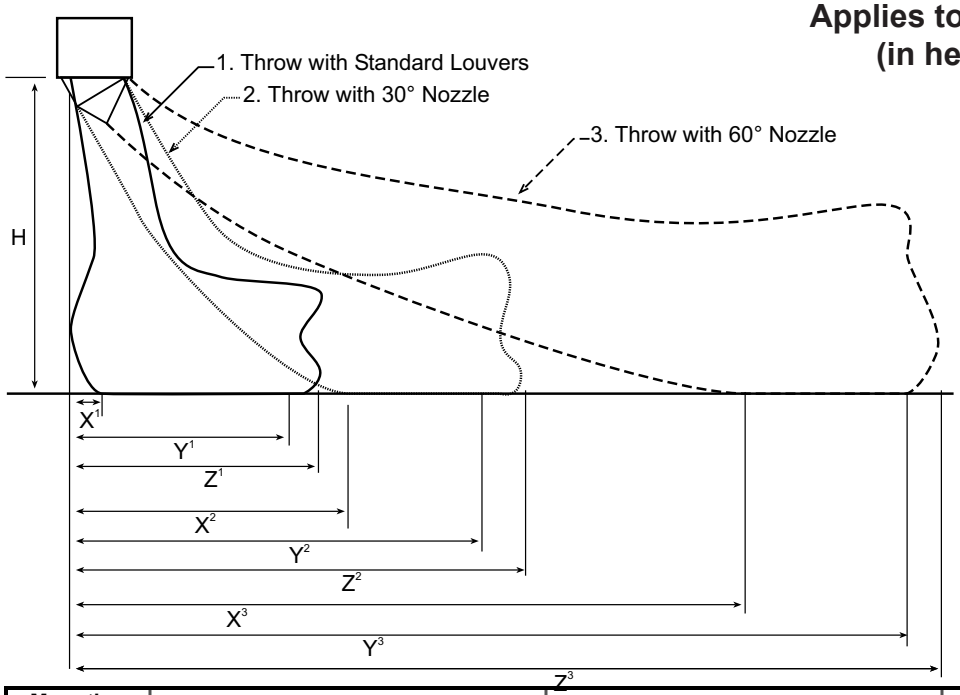

Notes:
"Z" is the point where the air velocity drops below 50 feet (15.2M) per minute. Throws listed are with standard louvers facing one direction and fully open. Throw pattern changes with louver angle, 2-way louver direction, and or optional 4-way louvers.

Mounting Height		Standard Louvers						30° Degree Nozzle						60° Degree Nozzle					
H		X^1		Y^1		Z^1		X^2		Y^2		Z^2		X^3		Y^3		Z^3	
Ft.	M	Ft.	M	Ft.	M	Ft.	M	Ft.	M	Ft.	M	Ft.	M	Ft.	M	Ft.	M	Ft.	M
20	6.1	5	(1.5)	55	(16.8)	134	(40.8)	40	(12.2)	90	(27.4)	146	(44.5)	70	(21.3)	125	(38.1)	158	(48.2)
30	9.1	8	(2.4)	53	(16.2)	121	(36.9)	44	(13.4)	86	(26.2)	133	(40.5)	76	(23.2)	119	(36.3)	145	(44.2)
40	12.2	12	(3.7)	49	(14.9)	109	(33.2)	47	(14.3)	81	(24.7)	120	(36.6)	=		=		=	
50	15.2	17	(5.2)	45	(13.7)	96	(29.3)	=		=		=		=		=		=	

REZNOR®

Sound Data

Sound (in dBA) for Models UDAP and UDAS at various distances.

Size	5 Feet 1.5 meters	10 Feet 3.0 meters	15 Feet 4.6 meters
30	59	47	40
45	59	47	40
60	59	47	40
75	69	55	49
100	N/A	58	54
125	N/A	59	55
150	N/A	55	51
175	N/A	55	52
200	N/A	56	53
225	N/A	59	56
250	N/A	59	56
300	N/A	62	59
350	N/A	64	61
400	N/A	65	62

Sound (in dBA) for Models UDBP and UDBS at a distance of 15 feet (4.6 meters).

Blower Speed	Size 30	45	60	75	100	125
Low	57	50	59	60	59	59
Medium	58	53	62	63	63	63
High	60	57	64	64	66	66

Temperature Rise	Size 150	175	200	225	250	300	350	400 *
75°F (24°C)	51	56	58	61	63	64	65	67
60°F (16°C)	56	59	62	63	66	70	72	71
45°F (7°C)	62	69	71	71	75	76	78	79

**** Note: The temperature rises of the Model 400 are 80°F (27°C), 70°F (21°C), and 50°F (10°C).***

Sound for Model LDAP at various distances.

Size	DISTANCE (FT.) 20 db	20 Pa	20 µbar	25 db	25 Pa	25 µbar	30 db	30 Pa	30 µbar	35 db	35 Pa	35 µbar	40 db	40 Pa	40 µbar
400	69	0.058	0.580	65	0.037	0.371	62	0.026	0.258	60	0.019	0.189	57	0.015	0.145
800	72	0.080	0.800	68	0.051	0.512	65	0.036	0.356	62	0.026	0.261	60	0.020	0.200
1200	74	0.100	1.000	70	0.064	0.640	67	0.044	0.444	64	0.033	0.327	62	0.025	0.250

µbar = microbar

Pa = Pascal

REZNOR®

BLOWER CHARTS
Models UDBP and UDBS
Blower Chart for Sizes 150 - 400
Standard motor and drive shown shaded.

UDBP and UDBS	TEMP RISE °F	CFM	Nozzle Option with Louvers				EXTERNAL Static Pressure					
			30°		60°		0"		.25"		.50"	
			RPM	BHP	RPM	BHP	RPM	BHP	RPM	BHP	RPM	BHP
150	45°	2562	730	0.43	730	0.43	730	0.43	840	0.55	930	0.68
	60°	1921	520	0.25	520	0.25	520	0.25	655	0.35	780	0.43
	75°	1537	405	0.17	405	0.17	405	0.17	- -	- -	- -	- -
175	45°	2989	910	0.68	910	0.68	910	0.68	960	0.83	1055	0.98
	60°	2242	660	0.44	660	0.44	660	0.44	775	0.51	865	0.63
	75°	1793	545	0.28	545	0.28	545	0.28	665	0.38	- -	- -
200	45°	3416	1020	0.91	1020	0.91	1020	0.91	1090	1.07	1160	1.24
	60°	2562	730	0.49	730	0.49	730	0.49	885	0.63	935	0.76
	75°	2049	600	0.34	600	0.34	600	0.34	720	0.45	830	0.51
225	45°	3843	740	1.05	740	1.05	740	1.05	845	1.22	885	1.40
	60°	2882	530	0.60	530	0.60	530	0.60	670	0.74	730	0.89
	75°	2306	430	0.42	430	0.42	430	0.42	565	0.54	640	0.66
250	45°	4270	900	1.30	900	1.30	900	1.30	935	1.49	980	1.69
	60°	3202	660	0.73	660	0.73	660	0.73	730	0.88	790	1.04
	75°	2562	570	0.56	570	0.56	570	0.56	610	0.69	685	0.83
300	45°	5123	990	2.04	990	2.04	990	2.04	1020	2.29	1070	2.55
	60°	3843	735	1.29	735	1.29	735	1.29	795	1.49	865	1.71
	75°	3074	600	0.95	600	0.95	600	0.95	- -	- -	- -	- -
350	45°	5977	1040	2.95	1040	2.95	1040	2.95	1075	3.24	1130	3.54
	60°	4483	800	1.80	800	1.80	800	1.80	850	2.04	930	2.28
	75°	3586	630	1.33	630	1.33	630	1.33	720	1.45	- -	- -
400	45°	6185	1055	3.56	1055	3.56	1055	3.56	1090	3.86	1170	4.17
	60°	4392	790	1.98	790	1.98	790	1.98	875	2.17	1020	2.42
	75°	4100	675	1.76	675	1.76	675	1.76	750	1.99	- -	- -

Sizes 30 to 125 do not show a standard drive because they have a Direct drive blower with multispeed/Multitap. They are available in 115/1/60 voltage only.

Model B with Belt Drive Motor

Model B unit heaters are designed to handle up to .5" w.c. of static pressure with temperature rises as shown from 45°F to 75°F. The following chart indicates the CFM, the motor HP, and the optional drive required to achieve the desired temperature rise with external pressures from 0 to .5" w.c.

Drive Option Key (see chart on next page):

AM __	The "AM" drive will provide the selected CFM and temperature rise when installed with the total external static pressure listed but ***MAY*** require field-adjustment of the blower speed (CFM). Check the temperature rise and the motor amps. If adjustment is needed, follow "Blower Speed Adjustment" instructions in the heater installation manual.	**STD**	The standard drive as set at the factory provides the selected CFM and temperature rise when installed with the external static pressure listed.
N.R.	The temperature rise and static pressure combination is not recommended for the heater size.	**STD**	The standard drive will provide the selected CFM and temperature rise when installed with the total external static pressure listed but ***REQUIRES*** field-adjustment of the blower speed (CFM). Follow the "Blower Speed Adjustment" instructions in the heater installation manual.

NOTES: (1) Sizes 50-100 do not show a standard drive because they have a standard direct drive blower motor.
(2) If the unit includes an optional blower cabinet, see the chart below for pressure drop information.

Temp. Rise	Heater Size																			
	25		50		75		100		125		165		200		250		300		400	
	Filter Thickness																			
	1"	2"	1"	2"	1"	2"	1"	2"	1"	2"	1"	2"	1"	2"	1"	2"	1"	2"	1"	2"
75°F	0.004	0.007	0.01	0.015	0.018	0.032	0.032	0.055	0.05	0.075	0.018	0.03	0.026	0.045	0.017	0.028	0.024	0.038	0.026	0.045
70°F	0.004	0.008	0.01	0.018	0.023	0.034	0.036	0.058	0.055	0.1	0.021	0.035	0.03	0.052	0.019	0.031	0.027	0.045	0.03	0.052
65°F	0.005	0.009	0.011	0.019	0.024	0.04	0.041	0.069	0.065	0.12	0.024	0.04	0.035	0.06	0.023	0.036	0.03	0.053	0.035	0.06
60°F	0.005	0.009	0.014	0.023	0.028	0.047	0.052	0.087	0.085	0.14	0.028	0.047	0.041	0.07	0.025	0.042	0.035	0.061	0.041	0.07
55°F	0.006	0.01	0.016	0.027	0.034	0.057	0.065	0.105	0.1	0.16	0.033	0.057	0.047	0.08	0.03	0.051	0.041	0.072	0.047	0.08
50°F	0.006	0.01	0.018	0.029	0.041	0.069	0.07	0.12	0.13	N.R.	0.04	0.068	0.057	0.095	0.035	0.062	0.04	0.085	0.057	0.095
45°F	0.007	0.011	0.024	0.04	0.05	0.086	0.092	0.16	0.18	N.R.	0.049	0.082	0.07	0.14	0.043	0.074	0.065	0.12	0.07	0.14

REZNOR®

BLOWER CHARTS
Model B with Belt Drive Motor (cont'd)

Optional Blower/Filter Cabinet for Models B

- Shipped separately for field assembly and installation
- Filter Rack (less filters)
- Filter Rack with 1" or 2" Permanent Filters

(3) Key to Drive Options

AM1	401-450 RPM	AM6	651-700 RPM	AM10	851-900 RPM	AM14	1051-1100 RPM
AM2	451-500 RPM	AM7	701-750 RPM	AM11	901-950 RPM	AM15	1101-1150 RPM
AM3	501-550 RPM	AM8	751-800 RPM	AM12	951-1000 RPM	AM16	1151-1200 RPM
AM4	551-600 RPM	AM9	801-850 RPM	AM13	1001-1050 RPM	AM17	1201-1250 RPM
AM5	601-650 RPM						

Model B	Temp Rise °F	CFM	Total External Static Pressure ("w.c.)											
			0		0.1		0.2		0.3		0.4		0.5	
			Drive	HP	Drive	HP	Drive	HP	Drive	HP	Drive	HP	Drive	HP
Size 125	75	1235	AM4	1/3	AM4	1/3	**STD**	**1/3**	**STD**	**1/3**	AM7	1/3	AM8	1/3
	70	1320	**STD**	**1/3**	**STD**	**1/3**	**STD**	**1/3**	AM7	1/3	AM8	1/3	AM9	1/2
	60	1540	**STD**	**1/3**	**STD**	**1/3**	AM7	1/3	AM8	1/2	AM9	1/2	AM10	1/2
	50	1850	AM7	1/2	AM8	1/2	AM9	1/2	AM9	1/2	AM10	1/2	AM11	3/4
	45	2055	AM8	1/2	AM9	3/4	AM10	3/4	AM11	3/4	AM11	3/4	AM13	3/4
Size 165	75	1630	AM3	1/2	STD	1/2	STD	1/2	**STD**	**1/2**	AM7	1/2	AM8	1/2
	70	1750	AM3	1/2	STD	1/2	**STD**	**1/2**	AM6	1/2	AM7	1/2	AM8	1/2
	60	2040	**STD**	**1/2**	**STD**	**1/2**	AM7	1/2	AM7	3/4	AM8	3/4	AM8	3/4
	50	2440	AM7	3/4	AM7	3/4	AM8	3/4	AM9	3/4	AM10	1	AM11	1
	45	2715	AM9	1	AM9	1	AM10	1	AM11	1	AM11	1	AM12	1
Size 200	75	1975	STD	1/2	STD	1/2	STD	1/2	**STD**	**1/2**	AM4	1/2	AM5	3/4
	70	2115	STD	1/2	STD	1/2	**STD**	**1/2**	STD	1/2	AM4	1/2	AM5	3/4
	60	2470	**STD**	**1/2**	**STD**	**1/2**	AM3	1/2	AM4	3/4	AM5	3/4	AM6	3/4
	50	2960	AM3	3/4	AM4	3/4	AM4	3/4	AM5	1	AM6	1	AM6	1
	45	3290	AM4	1	AM4	1	AM5	1	AM6	1	AM6	1	AM7	1 1/2
Size 250	75	2470	AM2	1/2	AM2	1/2	STD	3/4	**STD**	**3/4**	AM5	3/4	AM5	3/4
	70	2645	AM2	1/2	STD	3/4	**STD**	**3/4**	STD	3/4	AM5	3/4	AM6	3/4
	60	3085	**STD**	**3/4**	**STD**	**3/4**	AM5	3/4	AM5	1	AM6	1	AM7	1
	50	3700	AM5	1	AM5	1 1/2	AM6	1 1/2	AM7	1 1/2	AM7	1 1/2	AM8	1 1/2
	45	4115	AM6	1 1/2	AM7	1 1/2	AM7	2	AM8	2	AM8	2	AM8	2
Size 300	75	2960	STD	1	STD	1	STD	1	**STD**	**1**	AM6	1	AM6	1
	70	3170	STD	1	**STD**	**1**	**STD**	**1**	STD	1	AM6	1	AM7	1 1/2
	60	3700	**STD**	**1**	STD	1	AM6	1 1/2	AM7	1 1/2	AM7	1 1/2	AM8	1 1/2
	50	4440	AM7	2	AM8	2	AM8	2	AM9	2	AM9	3	AM10	3
	45	4935	AM9	3	AM9	3	AM9	3	AM10	3	AM11	3	AM11	3
Size 400	75	3950	AM2	1 1/2	STD	1 1/2	STD	1 1/2	**STD**	**1 1/2**	STD	1 1/2	AM6	1 1/2
	70	4230	STD	1 1/2	STD	1 1/2	**STD**	**1 1/2**	STD	1 1/2	AM6	1 1/2	AM6	1 1/2
	60	4935	**STD**	**1 1/2**	**STD**	**1 1/2**	STD	1 1/2	AM6	2	AM7	2	AM7	2
	50	5925	AM7	3	AM8	3	AM8	3	AM9	3	AM9	3	AM9	3
	45	6580	AM9	5	AM9	5	AM10	5	AM11	5	AM11	5	AM12	5

REZNOR®

MOTOR FULL LOAD AMP TABLE

HP	Type	FLA	RPM	V	PH
0.25	Open	5.1	1750	120	1
		2.1	1750	208	1
		2.3	1750	230	1
		1.1	1750	208	3
		1.4	1750	230	3
		0.75	1750	460	3
0.25	TEFC	3.6	1750	120	1
		2.2	1750	208	1
		1.9	1750	230	1
		1.6	1750	208	3
		1.4	1750	230	3
		0.7	1750	460	3
0.33	Open	5.5	1750	120	1
		3.2	1750	208	1
		2.8	1750	230	1
		1.4	1750	208	3
		1.6	1750	230	3
		0.8	1750	460	3
0.33	TEFC	4.6	1750	120	1
		2.3	1750	208	1
		2.4	1750	230	1
		1.2	1750	208	3
		1.2	1750	230	3
		0.6	1750	460	3
0.5	Open	8.8	1750	120	1
		5.1	1750	208	1
		4.4	1750	230	1
		3	1750	208	3
		2.5	1750	230	3
		1	1750	460	3
0.5	TEFC	7	1750	120	1
		3.4	1750	208	1
		3.5	1750	230	1
		2.3	1750	208	3
		2	1750	230	3
		1	1750	460	3
		0.7	1750	575	3

HP	Type	FLA	RPM	V	PH
0.75	Open	11	1750	120	1
		6.3	1750	208	1
		5.5	1750	240	1
		2.9	1750	208	3
		2.6	1750	240	3
		1.3	1750	460	3
0.75	TEFC	11	1750	120	1
		5.4	1750	208	1
		5.5	1750	230	1
		2	1750	208	3
		2.2	1750	230	3
		1.1	1750	460	3
		0.8	1750	575	3
1	Open	13	1750	120	1
		7.5	1750	208	1
		6.5	1750	240	1
		3.7	1750	208	3
		3.2	1750	240	3
		1.6	1750	460	3
		1.1	1750	575	3
1	TEFC	13	1750	120	1
		6.5	1750	230	1
		3.3	1750	208	3
		3.4	1750	230	3
		1.7	1750	460	3
		1.4	1750	575	3
1.5	Open	15	1750	120	1
		8.3	1750	208	1
		7.5	1750	230	1
		5.6	1750	208	3
		5	1750	230	3
		2.7	1750	460	3
		1.6	1750	575	3

HP	Type	FLA	RPM	V	PH
1.5	TEFC	16.4	1750	120	1
		9.5	1750	208	1
		8.2	1750	230	1
		4.3	1750	208	3
		4.4	1750	230	3
		2.2	1750	460	3
		1.6	1750	575	3
2	Open	20.4	1750	120	1
		10	1750	208	1
		10.2	1750	230	1
		7	1750	208	3
		6.6	1750	230	3
		3.5	1750	460	3
		2.1	1750	575	3
2	TEFC	24	1750	120	1
		12	1750	230	1
		6.5	1750	208	3
		5.8	1750	230	3
		2.9	1750	460	3
		2.3	1750	575	3
3	Open	14	3600	208	1
		12.4	3600	230	1
		9	3600	208	3
		8.6	3600	230	3
		4.3	3600	460	3
		3.6	3600	575	3
3	TEFC	30	3600	120	1
		15	3600	230	1
		8.5	3600	208	3
		8.2	3600	230	3
		4.1	3600	460	3
		3	3600	575	3

WARNING: Gas-fired appliances are not designed for use in hazardous atmospheres containing flammable vapors or combustible dust, or atmospheres containing chlorinated or halogenated hydrocarbons.

Installations in public garages or airplane hangars are permitted when in accordance with ANSI Z223.1 and NFPA 54 codes or CAN1-B149 and enforcing authorities.

FOR YOUR SAFETY

What to do if you smell gas:

- Do not try to light any appliance.
- Do not touch any electrical switch; do not use any phone in your building.
- Immediately call your gas supplier from a neighbor's phone. Follow the gas supplier's instructions.
- If you cannot reach your gas supplier, immediately call your fire department.

FOR YOUR SAFETY

Do not store or use gasoline or other flammable vapors and liquids in the vicinity of this or any other appliance.

WARNING: Improper installation, adjustment, alteration, service, or maintenance can cause property damage, injury, or death. Read the installation, operation, and maintenance instructions thoroughly before installing or servicing this equipment.

Requirements for installation vary depending on the model of heater and the type of installation. Follow the manufacturer's instructions and comply with all applicable codes.

Some venting requirements that apply to specific gas-fired models are shown on the following pages.

Pilot, Gas Control, and Air Control Descriptions Gas-Fired Unit Heaters

PILOT IGNITION SYSTEMS

- Intermittent Spark Pilot: Automatic lighting of pilot with an electronic spark on a call for heat. Pilot gas flow is shutoff between heat cycles. Approved for use in the United States with the natural gas supply only on indoor and outdoor units.
- Intermittent Spark Pilot with Timed Lockout: Automatic lighting of pilot with an electronic spark on a call for heat. Pilot gas flow is shutoff between heating cycles. Locked device stops gas flow to the pilot if the pilot fails to light in 120 seconds. Reset of lockout requires manual interruption of the thermostat circuit. Approved for use in the Unites States and Canada with natural or propane gas on indoor and outdoor applications.
- Direct Spark Ignition with Timed Lockout. Automatic lighting of the burner with an electronic spark on a call for heat by the thermostat. There is no pilot. Trial for ignition is ten seconds after which, if flame is not sensed, the unit tries for ignition again. If ignition is not proven after three attempts the unit will lockout and then automatically retry after a one hour down period **(Models UDAP, UDAS, UDBP, UDBS, LDAP, & UEAS Only)**.

NOTE: When installing gravity vented appliances (Model F & B) check local and state codes for requirements. Some states require the addition of spark pilot Option AH2 or AH3.

GAS CONTROL SYSTEMS

- Single Stage: Single-stage gas valve which cycles on at 100% fire on a call for heat.
- Two-Stage: Two stage gas valve which fires at 100% or 50% on Models F & B; 100% or 70% on Models UDAP, UDAS, UDBP & UDBS, as required by a remote two-stage thermostat. (Note: Two-Stage gas valve not available on Models F & B [sizes 25 & 50 MBH] or Models UDAP, UDAS, UDBP & UDBS [sizes 30 & 45 MBH])

AIR CONTROL SYSTEMS

- Air Recirculation Kit (Single-stage units only): First stage control of thermostat energizes unit fan to recirculate warm stratified ceiling air. Second stage control of thermostat opens single-stage gas valve.
- Special Air Recirculation Kit (Single-stage units only): Same as the basic kit, with the addition of a manual summer switch on thermostat for summer fan operation.

OPTIONAL POWER VENTING OF GRAVITY VENTED UNITS, Increases Seasonal Efficiency - Models F and B

Use only the Reznor® power venter designed for the particular model and size of heater.

Understand the operation before installing. When a venter is used with a heater, the room thermostat turns the venter on and off, and the venter turns the gas controls on and off. When the space calls for heat, the room thermostat contacts close the circuit which starts the venter. When the venter starts, air from the venter blower closes an air switch that is built into the venter.

Closing of the air flow switch sends an electric current to the burner controls, opening the gas valve and sending gas to the burners. When the thermostat is satisfied, the thermostat turns off the venter and the gas controls. As the venter blower stops, the airflow switch resets to the open position.

REZNOR®

The Indoor Air Economizer Feature on Model LDAP provides "free" heat. Here's how it works...

Step 1: Wall mounted thermostat calls for heat.

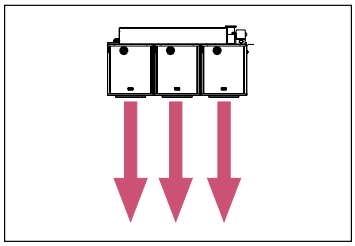

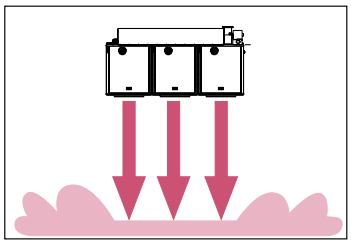

Step 2: Down discharge Model LDAP directs heating to the floor. As George Reznor used to say, "Because we live on the floor, not on the ceiling."

Step 3: Thermostat setting is reached, shutting off heater. Heated air naturally rises.

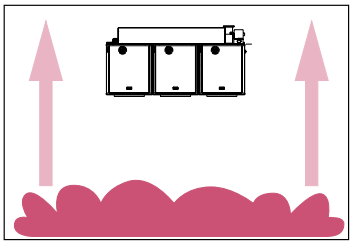

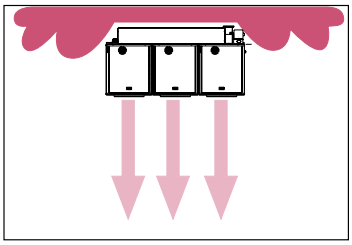

Step 4: Instead of heat remaining at the ceiling or escaping through the roof, a monitor (separate from the wall mounted thermostat) on Model LDAP senses the buildup of heat at the ceiling. This monitor triggers the fans at a slower speed to destratify the air and send "free" heat back to the floor.

Another benefit of Model LDAP: Using the fan(s) in the summer can improve working conditions by alleviating stagnant air conditions and creating a cooling effect for the occupants.

Suspending the Heater

Ceiling Suspension

WARNINGS: Check the supporting structure to be used to verify that it has sufficient load carrying capacity to support the weight of the heater. Suspend the heater only from the threaded nut retainers or with a manufacturer provided kit. Do NOT suspend from the heater cabinet.

See dimensional drawings for hanger locations, and install the ½"-13 spring nuts in the strut that is attached to the top of the unit. Comply with the requirements shown below when using threaded rod. If ordered with swivel connectors for 1" pipe, Option CK10, attach the swivels to the spring nuts according to illustration shown below and suspend with 1" pipe.

Locate the hardware kit shipped with the heater. The kit contains spring nuts, hex nuts, "U"-shape fittings, and lock washers for suspending the heater. It also includes louvers and the compression springs needed to install them.

When the heater is lifted for suspension, support the bottom of the heater with the crate bottom. If the bottom is not supported, damage could occur. After hanging or mounting, verify that any screws used for holding shipping brackets were reinstalled in the cabinet.

WARNING: All heaters must be level for proper operation. Do not place or add additional weight to the suspended heater.

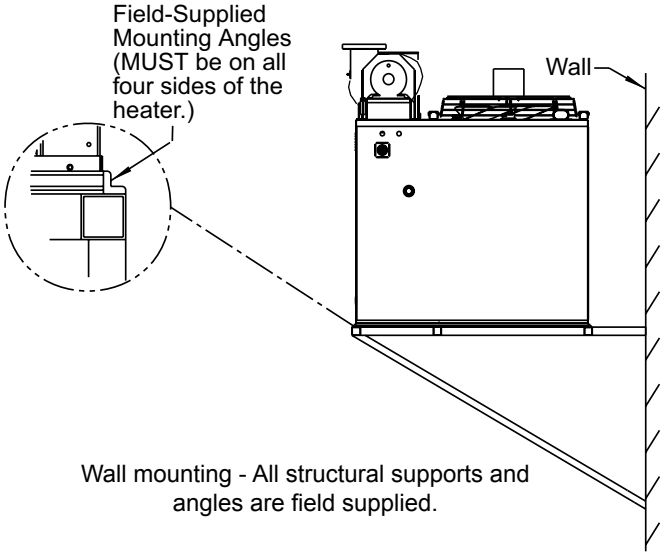

Wall mounting - All structural supports and angles are field supplied.

Wall Mounting

Guidelines for Wall Mounting Model LDAP Heaters

- Mounting is the responsibility of the installer. Verify that the supporting structure has sufficient load-carrying capacity to support the weight.
- Prior to installation, be sure that the method of support is in agreement with all local building codes. Check for service platform requirements.
- Maintain a minimum of 2" (51mm) clearance from the discharge air openings to structural supports. Additional clearance will be required if an optional nozzle is to be field installed.
- Determining the need for installing vibration or noise isolation is the responsibility of the installer.
- To prevent potential movement, field-supplied angles must be placed around the perimeter of the heater to anchor it to the structural supports.
- Structural supports must be placed as shown to prevent damage to the heater.
- All structural supports must be noncombustible materials.

REZNOR®

Options and Accessories

Apply to Unit Heater Models as Listed

Stepdown Transformers - (Models F and B)

Model	Unit Size 25	50	75	100	125-200	250	300	400
F (heater only)	.25	.25	.25	.50	.50	.50	.50	1.00
F with Field-installed Optional Venter	.25	.50	.50	.50	.75	.50	.75	1.00
B (heater only)	.50	.50	1.0	1.0				
B with Field-installed Optional Venter	.50	.50	1.0	1.0				

Optional Polytube Outlet Adapter - Apply to Models UDBP/UDBS

Description

The optional polytube adapter is designed to adapt suspended Model UDBP and UDBS blower type unit heaters for use with polytube ductwork. Directly in line with the heater discharge, the adapter is installed on the front of the heater and is equipped with a collar for attaching the field-supplied polytube.

The most common application of polytube ductwork for distribution of tempered air is in greenhouses. Polytubes are also used in industrial buildings to improve operating efficiency by recovering stratified air and reducing the need for complete area heating.

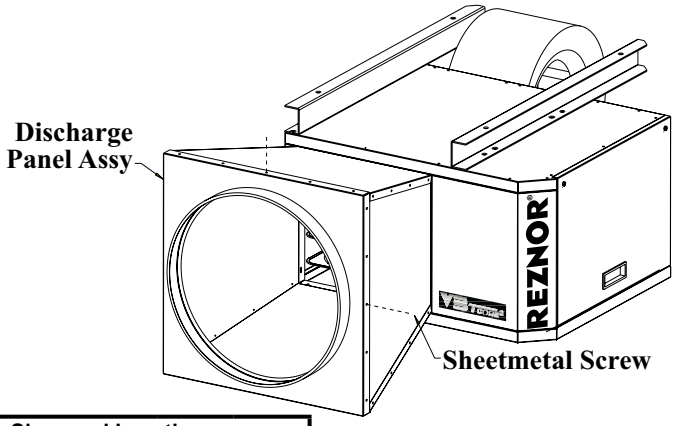

Size	CFM at 60°F Temp Rise	Polytube Diameter (inches)	Approximate Free Area (square inches)	Suggested Hole Sizes and Locations					
				Holes	Length of Polytube				
					50 Ft	75 Ft	100 Ft	125 Ft	150 Ft
75*	960	18	115	Quantity	75	75	75	75	75
				Diameter (inches)	1	1	1	1	1
				Spacing (inches)	8	12	16	20	24
100*	1345	18	160	Quantity	48	48	48	48	48
				Diameter (inches)	1 1/2	1 1/2	1 1/2	1 1/2	1 1/2
				Spacing (inches)	12 1/2	18 3/4	25	31 1/4	37 1/2
125*	1540	18	185	Quantity	50	50	50	50	50
				Diameter (inches)	1 1/2	1 1/2	1 1/2	1 1/2	1 1/2
				Spacing (inches)	12	18	24	30	36
150	1920	24	230	Quantity	40	40	40	40	45
				Diameter (inches)	2	2	2	2	1 7/8
				Spacing (inches)	15	22 1/2	30	37 1/2	40
175	2240	24	270	Quantity	50	50	80	80	80
				Diameter (inches)	1 7/8	1 7/8	1 1/2	1 1/2	1 1/2
				Spacing (inches)	12	18	15	18 3/4	22 1/2
200	2560	24	300	Quantity	50	50	50	50	50
				Diameter (inches)	2	2	2	2	2
				Spacing (inches)	12	18	24	30	36
225	2880	24	340	Quantity	42	42	42	42	42
				Diameter (inches)	2 1/4	2 1/4	2 1/4	2 1/4	2 1/4
				Spacing (inches)	14	21	28	35	42
250	3200	24	380	Quantity	50	50	50	60	60
				Diameter (inches)	2 1/4	2 1/4	2 1/4	2	2
				Spacing (inches)	12	18	24	25	30
300	3840	24	460	Quantity	60	60	75	75	75
				Diameter (inches)	2 1/4	2 1/4	2	2	2
				Spacing (inches)	10	15	16	20	24
350	4480	24	540	Quantity	50	50	50	50	50
				Diameter (inches)	2 1/2	2 1/2	2 1/2	2 1/2	2 1/2
				Spacing (inches)	12	18	24	30	36
400	5120	24	600	Quantity	60	60	75	75	75
				Diameter (inches)	2 1/2	2 1/2	2 1/4	2 1/4	2 1/4
				Spacing (inches)	10	15	16	20	24

* ***Required direct drive blower speed.***

Size	Speed
75	Low
100	Low
125	Medium

REZNOR®

Options and Accessories (cont'd)

Apply to Unit Heater Models as Listed

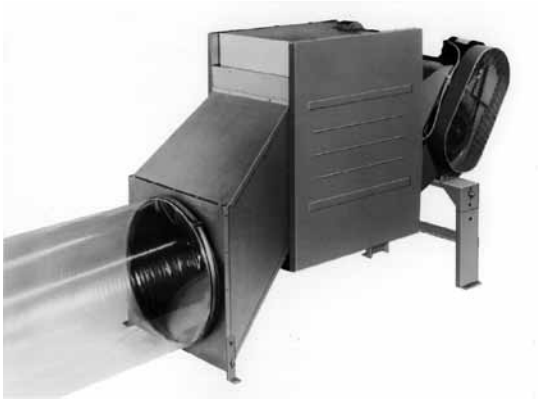

Photograph shows polytube outlet. The outlet nozzle requires field assembly and installation on the standard unit in place of the top front panel and louvers. The heater manufacturer does not supply tubing. Tubing can be ordered from a local greenhouse supply distributor. Two such suppliers are FOF Products, Inc. P. O. Box E, 1505 Racine Street, Delevan, WI 53115 and ACME Engineering Co., P.O. Box 978, Muskogee, OK 74402.

Optional Polytube Outlet Adapter - Apply to Model B

Description

The optional outlet nozzle is designed to allow the attachment of polytube-type air distribution for use in greenhouse and industrial buildings. Outlet on suspended heater may be either above, below, or directly in line with the heater discharge. A kit is available to floor mount the heater with outlet below the heater discharge (see illustration). Model B standard blower and drive are designed to handle rated CFM at .25 w.c. ESP, and will inflate a 24" tube up to 150 ft. long. See table for proper free area, minimum number of holes and sizes. Units may be used for greenhouse heating and ventilating or in industrial applications requiring high mounting heights or spot heating by means of polytube distribution.

The total open or free area of the polytube is important. Polytube suppliers have a great deal of flexibility in placement and sizing of holes. Too small of a free area will cause overheating. Excessive open area may not permit the tube to inflate. See the table below for a guide in hole size and location. Spacing and hole size may be varied, but free area must not be less than shown for the heater being installed.

Greenhouse Application - For greenhouse use, the number of units required is generally based on an airflow volume of 1-1/2 to 2 CFM per square foot of house floor area. Depending on the heat loss requirements of the house type, location, and desired temperature above ambient, the ventilation requirements determine the number of distribution systems required and the heat loss determines the BTUH heater size required. As a general rule, a single system will serve a maximum house width of 30 ft. and a length of 150 ft.

Size	CFM at .25" ESP	Polytube Diameter (inches)	Minimum Free Area (sq. in.)	Suggested Hole Sizes and Locations					
				Holes	Length of Polytube				
					50 Ft	75 Ft	100 Ft	125 Ft	150 Ft
75	925	18	110	Number	37pairs	75 pairs	75 pairs	- -	- -
				Diameter	1-1/2"	1"	1"	- -	- -
				Spacing	16"	12"	16"	- -	- -
100	1235	18	145	Number	50 pairs	50 pairs	100 pairs	94 pairs	- -
				Diameter	1-1/2"	1-1/2"	1"	1"	- -
				Spacing	12"	18"	12"	16"	- -
125	1540	18	185	Number	40 pairs	60 pairs	60 pairs	125 pairs	- -
				Diameter	1-7/8"	1-1/2"	1-1/2"	1"	- -
				Spacing	15"	15"	20"	12"	- -
130	1600	24	190	Number	40 pairs	60 pairs	60 pairs	125 pairs	- -
				Diameter	1-7/8"	1-1/2"	1-1/2"	1"	- -
				Spacing	15"	15"	20"	12"	- -
165	2035	24	240	Number	50 pairs	50 pairs	75 pairs	75 pairs	75 pairs
				Diameter	1-7/8"	1-7/8"	1-1/2"	1-1/2"	1-1/2"
				Spacing	12"	18"	16"	20"	24"
200	2465	24	300	Number	42 pairs	42 pairs	60 pairs	60 pairs	100 pairs
				Diameter	2-1/4"	2-1/4"	1-7/8"	1-7/8"	1-1/2"
				Spacing	14"	21"	20"	25"	18"
250	3085	24	360	Number	40 pairs	60 pairs	60 pairs	60 pairs	60 pairs
				Diameter	2-1/2"	2"	2"	2"	2"
				Spacing	15"	15"	20"	25"	30"
300	3700	24	425	Number	75 pairs	75 pairs	75 pairs	75 pairs	75 pairs
				Diameter	2"	2"	2"	2"	2"
				Spacing	9"	12"	16"	20"	24"
400	4935	24	550	Number	60 pairs	60 pairs	60 pairs	100 pairs	100 pairs
				Diameter	2-1/2"	2-1/2"	2-1/2"	1-7/8"	1-7/8"
				Spacing	10"	15"	20"	15"	18"

CAUTION: To prevent overheating of the blower unit heater and to ensure correct air distribution, the minimum hole area must be provided as shown in the table for each size. If more holes are used, do not exceed 1.25 times the minimum area shown to ensure proper tube inflation.

Conversion Table (Diameter to Area)

Diameter of the Hole (inches)	Area of the Hole (square inches)
2-1/2	4.91
2-1/4	3.98
2	3.14
1-7/8	2.76
1-1/2	1.76
1	0.785

Optional Downturn Nozzles - Apply to Models UDAP, UDAS, UDBP, UDBS, UEAS, F and B

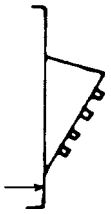

Optional Downturn Nozzle with 25°-65° Range of Air Deflection

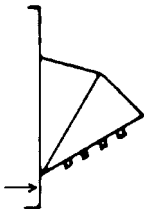

Optional Downturn Nozzle with 50°-90° Range of Air Deflection

IMPORTANT: On fan Models UDAP, UDAS, UEAS and F, do not use optional vertical louvers in combination with a nozzle with 50-90° range of air deflection.

· Shipped separately for field assembly and installation

Model OT Oil Tank - Apply to Models OH

DESCRIPTION

The Model OT250 fuel tank is a 250 gallon, single-wall, indoor, UL-listed fuel oil tank. Oil tanks often eliminate needed work and storage space, but the Model OT-250 oil tank is designed with a work bench top that allows the tank itself to be used as a work area. The tank has a large (12-1/2 sq. ft.) work surface with 2" side and rear retainer lips and 3" legs for "toe space".

Tank construction is of 12 gauge carbon steel with all welded seams. The painted exterior coordinates with Reznor® oil-fired heaters.

The Reznor® OT-250 fuel tank is also engineered to facilitate installation. The support legs provide convenient space for forklift handling. Each tank has the following connection ports -- 2" supply; 2" gauge' 2" vent' 4" emergency vent; and 1" drain. Each port has heavy duty forged threads.

Model OT-250 tank is UL listed to UL142 Standard.

OPTIONS/ACCESSORIES - Field Installed

- Heater stand for Model OT tank used with Model OH heater only

DIMENSIONS - Model OT Fuel Tank

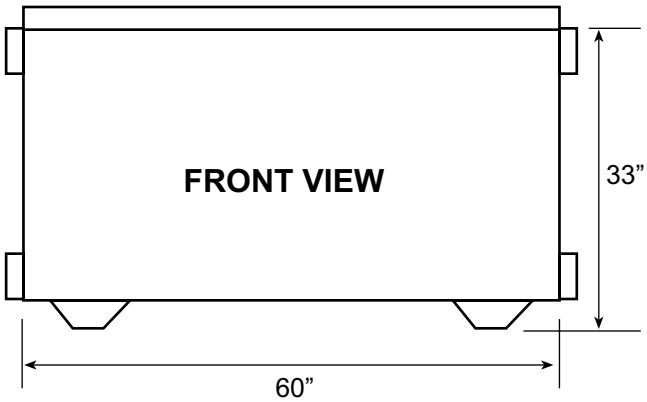

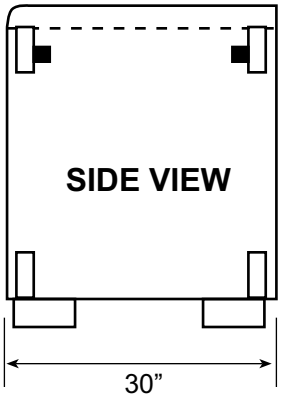

Model OH Oil Heater

Heater Stand (Option ST1)

Model OT-250 Oil Tank

Port Locations

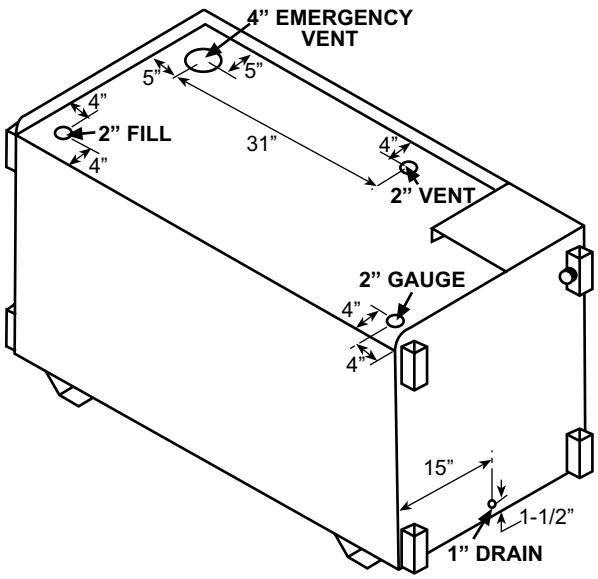

Model LDAP Discharge Air Options

LOUVERS

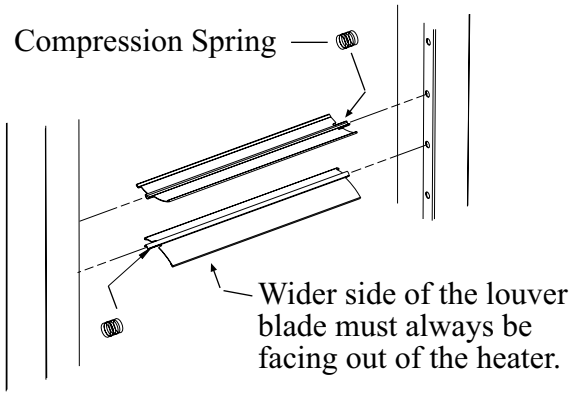

Airflow direction depends on how the louvers are installed

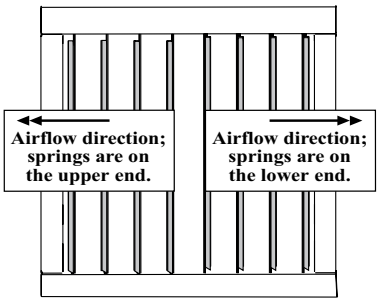

INSTALLING LOUVERS

After the unit is suspended/mounted, install the air directional louvers or optional nozzle. If an optional nozzle is being installed, follow the instructions included with the nozzle. If a nozzle is not being used, install the louvers in the discharge opening(s).

Louvers and springs are in the hardware kit shipped with the heater.

Before actually installing the louvers, note the louver curve and determine how the louvers should be positioned to provide the optimal throw pattern. Opening is square so louvers may be installed in any direction. Louvers may be installed with the curve all the same direction (either way) or the right half one way and left the other as illustrated above.

LOUVER INSTALLATION INSTRUCTIONS

1) With the wider section of the louver facing out of the heater, place one of the compression springs over the tab on the notched end of a louver. The end of the louver with the spring will fit in any direction in the square opening. How the louver turns depends on which end of the louver is inserted first.

2) Depending on the throw pattern selected, push the louver tab with the spring into a hole in the discharge opening and insert the louver tab on the other end into the corresponding hole on the opposite side.

3) Airflow direction depends on how the louvers are installed (see illustration above).

FOUR-WAY DISCHARGE LOUVERS (Option CD32)

Option CD32 consists of additional louvers that are installed perpendicular to the standard individually adjustable louvers. By installing the optional perpendicular louvers, the two sets of louvers can be adjusted to direct airflow in any of the four directions, enabling the installer to select and increase or decrease the coverage area.

MULTIPLE POSITION DISCHARGE NOZZLE

Option CD57 is a 30° angle discharge nozzle. Option CD58 is a 60° angle discharge nozzle. Option CD59 is a 30° angle discharge nozzle with 4-way louvers. A nozzle may be installed at each discharge air opening in any direction. **NOTE:** Do not install 4-way louvers with a 60° nozzle.

Nozzles should be attached after the unit is suspended. Follow the installation instructions in the nozzle package.

Standard louvers are installed in the nozzle opening as shown in the photo on the left.

Option CD58,
60° Discharge Nozzle

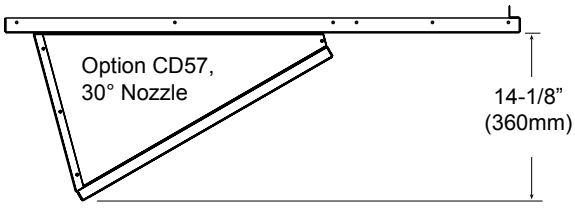

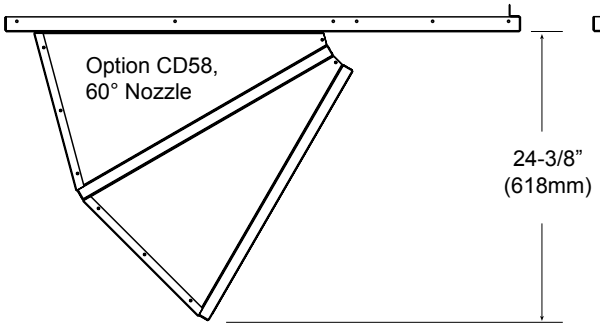

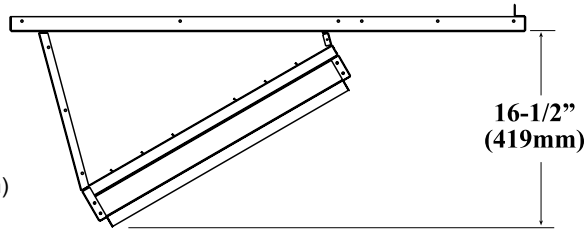

Option CD59, 30° Nozzle
with 4-Way Louvers

REZNOR®

Reznor Separated Combustion Systems

Following is an overall description of Separated Combustion Systems as it relates to Models UDAS and UDBS. For more specific separated combustion venting information, especially as it relates to Model UEAS, please see the appropriate installation manual.

The manufacturer of Reznor heating equipment, for years, has pioneered in separated combustion system technology, eliminating “open flame” combustion problems. This has resulted in a complete line of Reznor products using the separated combustion principle-

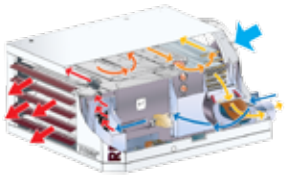

- air for combustion is mechanically induced from outside the building, preventing dirt, lint, dust or other contaminants in the indoor atmosphere from entering the burner and combustion zone of the furnace,
- the air flow is metered to provide optimum and efficient combustion that is unaffected by negative building pressure or wind,
- after combustion, the air is exhausted back to the outdoor atmosphere.

Reznor separated combustion products provide all of the benefits while requiring only one building penetration. See the venting illustrations below.

Use only approved vent terminals. No other venting arrangements are approved or certified for use with Models UDAS, UDBS or UEAS heaters. Either the horizontal vent/combustion air terminal kit (Option CC6 or Option CC14) or the vertical vent/combustion air terminal kit (Option CC2) is required.

Refer to Venting Installation Manual Form I-UD-V-SC for Models UDAS and UDBS; Form I-UEAS for Model UEAS. Or contact your Reznor Representative at 800-695-1901 for more detailed information.

For installations where dirt, dust, and other air borne contamination is present in the indoor environment, it is recommended to use separated combustion units (UDAS, UDBS). These models use air from outside the space for combustion. This will help reduce the build up of contaminates on the burner which would affect the combustion process. Refer to the installation manuals for recommended frequency of maintenance and cleaning.

Vertical Venting of Separated Combustion Unit through Roof

- See the illustration to the right for a typical installation of one vertical vent terminal and concentric adapter. If vertical vent (Option CC2) is selected, a vertical vent terminal/combustion-air inlet assembly is provided.

NOTE: Illustration for typical installation example only. Vent terminals may vary based on heater size and model.

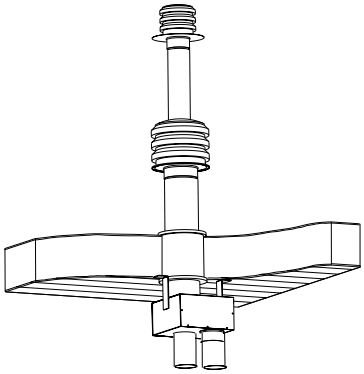

Horizontal Venting of Separated Combustion Unit through Wall

- See the illustration to the right for a typical installation of a single horizontal vent terminal and concentric adapter. When Option CC6 is ordered, one horizontal vent terminal/combustion air inlet assembly is provided.

NOTE: Illustration for typical installation example only. Vent terminals may vary based on heater size and model.

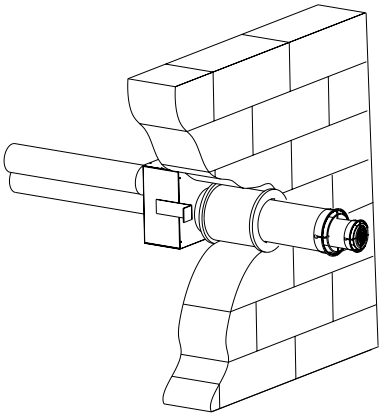

Residential Garage - Horizontal Venting of Separated Combustion Unit through Wall

(Models UDAS and UDBS Only)

Option CC14, the Compact, Aesthetic, Concentric Vent/Combustion Air, Horizontal Vent Kit is for use with Model UDAS and UDBS in sizes 30, 45, 60, and 75.

The most common use for these vent kit is for Model UDAS for residential garage installations. This option allows a homeowner to vent out a side wall and avoid the unsightly 18" to 36" exhaust vent. This attractive vent kit preserves the home's exterior appearance.

For more information, contact your Reznor Representative at 800-695-1901, or see the instruction manual Form I-UDAS/UDBS-ASC.

NOTE: Siding trim is field-supplied by contractor to match home appearance.

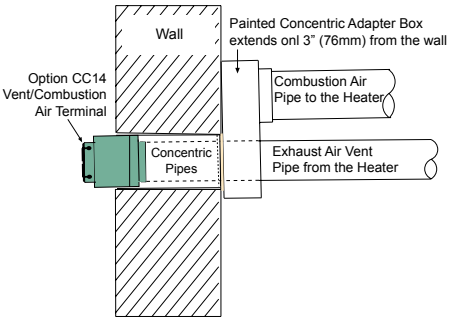

REZNOR®

Reznor RezPro® Toolbox Software

UNIT HEATER SELECTION HELP

Reznor now offers unit heaters with three different levels of efficiency. How can you tell which one is right for your climate and your pocketbook?

Now you can compare different Reznor Unit Heaters and get specific energy savings and return on investment results for your specific area.

Here's how it works: When you open RezPro Toolbox, select the Heat Load button as indicated by the arrow in the illustration to the right.

HEAT LOAD CALCULATOR

The Heat Load Calculator window (right) will prompt you for all the important data such as building size, insulation value, equipment type, fuel, etc.

When you hit the CALCULATE button you will see the Selector Outputs window (below right). This will show the equipment requirements for your building. The Building Heat Loss shown for the selected application is 465.82 MBH (as indicated by the arrow).

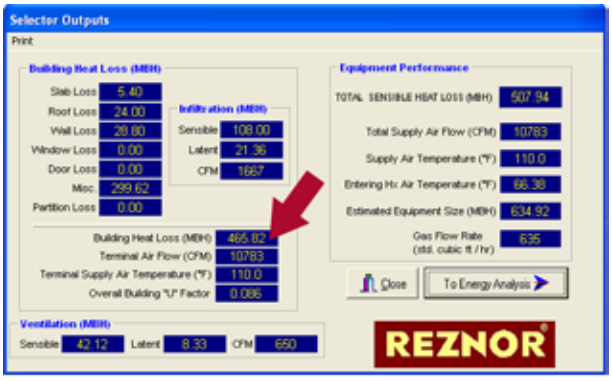

REZNOR®

Reznor Toolbox Software (cont'd)

ENERGY ANALYZER

To determine the energy consumption of various unit heaters, select the Energy Analyzer button on the Toolbox screen as indicated by the arrow (right).

The Energy Analyzer screen (bottom right) opens. Select the appropriate data as shown:

1. City: For this example we have selected Memphis, Tennessee. The Elevation is automatically assigned.

   You'll also need to select the Design Load. (BTU Required based on the heat loss)

2. Thermostat Program: You can specify a weekday/weekend, no program, or create your own thermostat program. For this example we have selected a weekday/weekend program.

3. Unit1: You can compare the energy usage of two different types of unit heaters. For this example we have selected the very high efficiency Model UEAS260 as Unit 1

4. Unit 2: We have selected standard efficiency Model F300 as Unit 2.

5. Energy Costs: You can enter current or future projected energy costs for electricity and natural gas or propane.

   When you Run the program the Output values are automatically filled in.

   The result of this program is that you will need 2 Model UEAS260 or F300 units to properly heat this building (1.944 and 1.938 respectively).

6. The annual energy costs for gas and electricity have both been calculated and the result is Model UEAS260 will save over $1,400 per year.

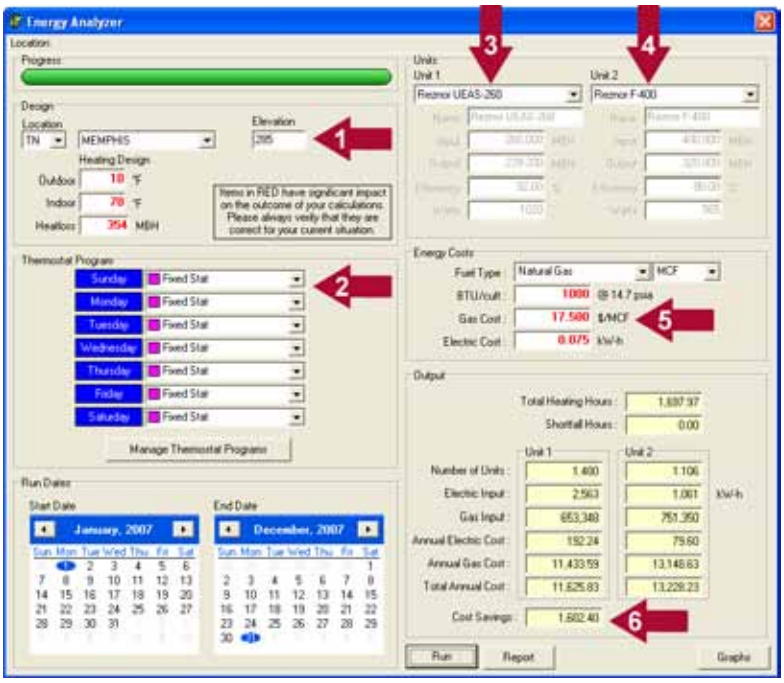

As mentioned, this example was run for Memphis, TN. Energy savings in colder climates will be more dramatic.

GET YOUR COPY TODAY!

Reznor RezPro Toolbox software is free to any registered user of the Reznor website. Registration is free. Your information isn't sold to third parties. And you don't get inundated with spam.

Once you have registered, go to the software section of the website. You will need to request a password from your Reznor Representative. Or you can request a Toolbox CD from your representative. You can reach them by calling 800-695-1901.

We recommend that you maintain this software on a computer with internet access so that current weather and Reznor Product data can be uploaded as needed.

REZNOR®

Sample Specifications
Model UEAS

GAS-FIRED, SEPARATED COMBUSTION UNIT HEATERS

Provide (90%+) high-efficiency, separated-combustion, power vented, condensing, gas-fired unit heaters manufactured as Reznor® brand units. The unit shall be designed for use in a building with negative pressures up to 0.15 " w.c. and for use in building where a non-explosive atmosphere exists that is dust laden and/or contains mildly corrosive fumes.

Fuel

Each of the 4 sizes in the Model UEAS series shall be equipped for use with natural gas with propane conversion kit shipped with each unit. Gas connection shall be external to the cabinet.

Heat Exchanger

The heater shall be equipped with a multi-cell, 4 pass serpentine style steel primary heat exchanger. Primary heat exchanger tubes shall be press fabricated of (titanium stabilized, corrosion resistant aluminized steel) (409 stainless steel). The heater shall also be equipped with an extruded aluminum MacroChannel secondary heat exchanger. Secondary heat exchanger shall have a PVC condensate drain connection. All heat exchangers shall be fabricated with no welding or brazing, only tool pressed mechanical joints. All heat exchanger cells shall be designed with an aerodynamic cross section to provide maximum airflow.

Burner

The units shall incorporate a single, one piece burner assembly with a single orifice. The burner shall have a continuous wound close pressed stainless steel ribbon separating the flame from the burner interior. All units shall have a single venturi tube and orifice supplying fuel to a one-piece burner housing. Each heat exchanger cell shall use balanced draft induction to maintain optimum flame control.

Controls

Controls shall include a single-stage gas valve; direct spark multi-try ignition with electronic flame supervision with timed lockout integrally controlled via a printed circuit control board. The control board shall also incorporate diagnostic lights, DIP switches for fan overrun settings, and a relay for fan only operation. All units shall be equipped with a safety limit switch.

All controls shall be enclosed in the sealed control compartment to protect them from accidental damage, dust, and atmospheric corrosion.

Combustion Air and Venting

The unit shall have a factory-installed power venter device to draw combustion air from outside of the building. The outside air shall enter the unit through a factory-installed round inlet air terminal on the rear of the heater. The control compartment shall be sealed and the access door shall be gasketed to prevent dirt, lint, dust, or other contaminants present in the heated space from entering the unit. The control compartment door shall be equipped with a safety interlock switch to prevent operation when the door is open.

The combustion air supply pipe and flue exhaust pipe shall be run in parallel from the heater to a factory supplied concentric adapter assembly, which allows for a single wall or roof penetration, to the (horizontal) (vertical) air inlet and vent terminal. A 4" PVC clean out cap drilled and tapped for attaching a vent condensate drain is included with the vent/combustion air kit.

The combustion air/venting system shall include a vibration isolated power venter motor and wheel assembly and a combustion air pressure switch.

Electrical

Operation shall be controlled by an integrated circuit board that includes LED diagnostic indicator lights. Supply voltage connections shall be made in a sealed junction box. 24-volt control connections shall be made on an externally mounted terminal strip with connections (W1, W2, R, and G). All internal wiring, both line and control voltages, shall be terminated by insulated terminal connectors to minimize shock hazard during service.

Each unit shall be equipped for use with 115/1 volt power supply.

All units will be equipped with a built-in disconnect switch.

Cabinet

The cabinet shall be low profile with a pre-coat or powdercoat RAL 1001 white paint finish. Finish shall be a minimum 80 gloss on G30 galvanized steel. The cabinet shall be constructed so that screws are not visible from the bottom, front, or sides, except for service panel and accessories. Unit construction shall incorporate a beveled front corner on control side for additional cabinet rigidity. All units shall be manufactured with a tooled drawn supply air orifice on the rear panel to reduce fan inlet noise.

The unit shall be designed for ceiling suspension featuring 3/8"-16 female threads (hanger kits for 1" pipe) at 4-point locations with no additional adapter kits.

The cabinet shall be equipped with RAL 3005 burgundy painted, roll-formed horizontal louvers. Louvers shall be spring held and adjustable for directing airflow. (Vertical louvers) (downturn nozzles) (downturn nozzles with vertical louvers) shall be available.

The cabinet shall be equipped with a full safety fan guard. The (open dripproof) (enclosed) motor and fan assembly shall be resiliently mounted to the cabinet to reduce vibration and noise.

The unit shall be designed with a full opening service access panel complete with screw closure attachment and lifting handle for removal. Service panel shall be fully gasketed and equipped with a safety interlock switch. All components in the gas train, all standard electrical controls, and the power venter shall be within the sealed service compartment.

Minimum top clearance from combustibles shall be 4". Minimum bottom clearance from combustibles shall be 1". Minimum clearance from combustibles on non-service side shall be 2".

Certifications

The unit shall be design ETL Listed for commercial/industrial installation.

Manufacturer must have a minimum of 50 years experience in the manufacture of gas fired unit heaters.

REZNOR®

Sample Specifications
Model UDAS

GAS-FIRED, SEPARATED COMBUSTION UNIT HEATERS

Provide (82%, 83%) high-efficiency, separated-combustion, power vented, gas-fired unit heaters manufactured as Reznor® brand units. The unit shall be designed for use in a building with negative pressures up to 0.15 " w.c. and for use in building where a non-explosive atmosphere exist that is dust laden and/or contains mildly corrosive fumes.

Fuel

Each of the 14 sizes in the Model UDAS series shall be equipped for use with (natural) (propane) gas. Gas connection shall be external to the cabinet.

Heat Exchanger

The heater shall be equipped with a multi-cell, 4 pass serpentine style steel heat exchanger. Heat exchanger tubes shall be press fabricated of (titanium stabilized, corrosion resistant aluminized steel) (409 stainless steel) (316 stainless steel). All heat exchangers shall be fabricated with no welding or brazing, only tool pressed mechanical joints. All heat exchanger cells shall be designed with an aerodynamic cross section to provide maximum airflow.

Burner

The units shall incorporate a single, one piece burner assembly with a single orifice. The burner shall have a continuous wound close pressed stainless steel ribbon separating the flame from the burner interior. All units shall have a single venturi tube and orifice supplying fuel to a one-piece burner housing. Each heat exchanger cell shall use balanced draft induction to maintain optimum flame control.

Controls

Controls shall include a (single-stage) (two-stage) gas valve; direct spark multi-try ignition with electronic flame supervision with timed lockout integrally controlled via a printed circuit control board. The control board shall also incorporate diagnostic lights, DIP switches for fan overrun settings, and a relay for fan only operation. All units shall be equipped with a safety limit switch.

All controls shall be enclosed in the sealed control compartment to protect them from accidental damage, dust, and atmospheric corrosion.

Combustion Air and Venting

The unit shall have a factory-installed power venter device to draw combustion air from outside of the building. The outside air shall enter the unit through a factory-installed round inlet air terminal on the rear of the heater. The control compartment shall be sealed and the access door shall be gasketed to prevent dirt, lint, dust, or other contaminants present in the heated space from entering the unit. The control compartment door shall be equipped with a safety interlock switch to prevent operation when the door is open.

The combustion air supply pipe and flue exhaust pipe shall be run in parallel from the heater to a factory supplied concentric adapter assembly, which allows for a single wall or roof penetration, to the (horizontal) (vertical) air inlet and vent terminal.

The combustion air/venting system shall include a vibration isolated power venter motor and wheel assembly and a combustion air pressure switch. Unit Sizes 30-125 shall include a flame rollout switch.

Electrical

Operation shall be controlled by an integrated circuit board that includes LED diagnostic indicator lights. Supply voltage connections shall be made in a sealed junction box. 24-volt control connections shall be made on an externally mounted terminal strip with connections (W1, W2, R, and G). All internal wiring, both line and control voltages, shall be terminated by insulated terminal connectors to minimize shock hazard during service.

Each unit shall be equipped for use with 115/1 volt power supply. (Stepdown transformers shall be available to be field installed for use with (208) (230) (460) volt power supply.)

All units will be equipped with a built-in disconnect switch.

Cabinet

The cabinet shall be low profile with a pre-coat or powdercoat RAL 1001 white paint finish. Finish shall be a minimum 80 gloss on G30 galvanized steel. The cabinet shall be constructed so that screws are not visible from the bottom, front, or sides, except for service panel and accessories. Unit construction shall incorporate a beveled front corner on control side for additional cabinet rigidity. All units shall be manufactured with a tooled drawn supply air orifice on the rear panel to reduce fan inlet noise.

The unit shall be designed for ceiling suspension featuring 3/8"-16 female threads (hanger kits for 1" pipe) at both 2-point and 4-point locations with no additional adapter kits. (Hanger kit for ceiling mounting shall be available for Sizes 30-125.)

The cabinet shall be equipped with RAL 3005 burgundy painted, roll-formed horizontal louvers. Louvers shall be spring held and adjustable for directing airflow. (Vertical louvers) (downturn nozzles) (downturn nozzles with vertical louvers) shall be available.

The cabinet shall be equipped with a full safety fan guard with no more than ½ inch grill spacing on Sizes 30-125 or no more than 1 inch on Sizes 150-400. The (open dripproof) (enclosed) motor and fan assembly shall be resiliently mounted to the cabinet to reduce vibration and noise.

The unit shall be designed with a full opening service access panel complete with screw closure attachment and lifting handle for removal. Service panel shall be fully gasketed and equipped with a safety interlock switch. All components in the gas train, all standard electrical controls, and the power venter shall be within the sealed service compartment.

Minimum top clearance from combustibles shall be 1" for Sizes 30-125 and 4" for Sizes 150-400. Minimum bottom clearance from combustibles shall be 1" for all sizes. Minimum clearance from combustibles on non-service side shall be 1" for Sizes 30-125 and 2" for Sizes 150-400.

REZNOR®

Sample Specifications
Model UDAS (cont'd)

Certifications

Unit(s) shall be design certified by the Canadian Standards Association to ANSI Z83.8b and CSA 2.6b for commercial/industrial installation.

(Model sizes 30, 45, 60, 75, 100 and 125 MBH shall be certified to CSA International Requirement 10-96 - U.S., CR96-0005 - Canada for use in attached residential garage.

Manufacturer must have a minimum of 50 years experience in the manufacture of gas fired unit heaters.

Sample Specifications
Model UDBS

GAS-FIRED, SEPARATED COMBUSTION UNIT HEATERS

Provide (82%, 83%) high-efficiency, separated-combustion, power vented, gas-fired unit heaters manufactured as Reznor® brand units. The unit shall be designed for use in a building with negative pressures up to 0.15 " w.c. and for use in building where a non-explosive atmosphere exist that is dust laden and/or contains mildly corrosive fumes.

Fuel

Each of the 14 sizes in the Model UDBS series shall be equipped for use with (natural) (propane) gas. Gas connection shall be external to the cabinet.

Heat Exchanger

The heater shall be equipped with a multi-cell, 4 pass serpentine style steel heat exchanger. Heat exchanger tubes shall be press fabricated of (titanium stabilized, corrosion resistant aluminized steel) (409 stainless steel) (316 stainless steel). All heat exchangers shall be fabricated with no welding or brazing, only tool pressed mechanical joints. All heat exchanger cells shall be designed with an aerodynamic cross section to provide maximum airflow.

Burner

The units shall incorporate a single, one piece burner assembly with a single orifice. The burner shall have a continuous wound close pressed stainless steel ribbon separating the flame from the burner interior. All units shall have a single venturi tube and orifice supplying fuel to a one-piece burner housing. Each heat exchanger cell shall use balanced draft induction to maintain optimum flame control.

Controls

Controls shall include a (single-stage) (two-stage) gas valve; direct spark multi-try ignition with electronic flame supervision with timed lockout integrally controlled via a printed circuit control board. The control board shall also incorporate diagnostic lights, DIP switches for blower overrun settings, and a relay (definite purpose 3 pole contactor) for blower only operation. All open (TEFC) blower motors shall have automatic thermal overload protection or be equipped with a factory installed motor starter with adjustable thermal overloads. All units shall be equipped with a safety limit switch.

All controls shall be enclosed in the sealed control compartment to protect them from accidental damage, dust, and atmospheric corrosion.

Combustion Air and Venting

The unit shall have a factory-installed power venter device to draw combustion air from outside of the building. The outside air shall enter the unit through a factory-installed round inlet air terminal on the rear of the heater. The control compartment shall be sealed and the access door shall be gasketed to prevent dirt, lint, dust, or other contaminants present in the heated space from entering the unit. The control compartment door shall be equipped with a safety interlock switch to prevent operation when the door is open.

The combustion air supply pipe and flue exhaust pipe shall be run in parallel from the heater to a factory supplied concentric adapter assembly, which allows for a single wall or roof penetration, to the (horizontal) (vertical) air inlet and vent terminal.

The combustion air/venting system shall include a vibration isolated power venter motor and wheel assembly and a combustion air pressure switch.

Electrical

Operation shall be controlled by an integrated circuit board that includes LED diagnostic indicator lights. Supply voltage connections shall be made in a sealed junction box. 24-volt control connections shall be made on an externally mounted terminal strip with connections W1, W2, R, and G. All internal wiring, both line and control voltages, shall be terminated by insulated terminal connectors to minimize shock hazard during service.

Units shall be equipped with a 115V power supply (Stepdown transformers shall be available to be field installed for use with a (208) (230) (460) volt power supply.)

All units will be equipped with a suitably rated, factory installed built-in disconnect switch.

Blower

Size 30,000-125,000 BTUH units shall be equipped with a centrifugal blower with direct drive from an open dripproof motor with internal overloads. Size 30,000 and 45,000 BTUH units must be able to handle .5" w.c. of external static pressure. Size 60,000-125,000 BTUH units must be able to handle .75" w.c. of external static pressure. (Size 30,000-125,000 BTUH units may be equipped with a blower inlet guard.)

Size 150,000-400,000 BTUH units shall be equipped with a centrifugal blower and adjustable belt drive and an (open dripproof) (totally enclosed) blower motor with internal overloads. Size 150,000-400,000 BTUH units must be able to handle .5" w.c. of external static pressure. (Size 150,000-400,000 BTUH units may be equipped with an OSHA-type belt guard and blower inlet guard.)

REZNOR®

Sample Specifications
Model UDBS (cont'd)

Cabinet

The cabinet shall be low profile with a pre-coat or powdercoat RAL 1001 white paint finish. Finish shall be a minimum 80 gloss on G30 galvanized steel. The heat exchanger/control compartment cabinet shall be constructed so that screws are not visible from the bottom, front, or sides, except for service panel and accessories. Cabinet shall have a beveled front corner on the control side for additional cabinet rigidity.

The unit shall be designed for ceiling suspension featuring 3/8”-16 female threads (hanger kits for 1” pipe) at 4-point locations.

The cabinet shall be equipped with RAL 3005 burgundy painted, roll-formed horizontal louvers (duct flange). Louvers shall be spring held and adjustable for directing airflow. (Vertical louvers) (downturn nozzles) (downturn nozzles with vertical louvers) shall be available.

The unit shall be designed with a full opening service access panel complete with captive screw closure attachment and lifting handle for removal. Service panel shall be fully gasketed and equipped with a safety interlock switch. All components in the gas train, all standard electrical controls, and the power venter shall be within the sealed service compartment.

Minimum **top** clearance from combustibles shall be 6” (152mm) for Size 30,000-125,000 BTUH units and 14” (356mm) for Size 150,000-400,000 BTUH units. Minimum **bottom** clearance from combustibles shall be 1” (25mm) for all size units. Minimum clearance on **access side** shall be 18” (457mm) for all sizes. Minimum clearance on **non-access side** shall be 24” (610mm) for all sizes. Minimum **rear** clearance for all sizes is 18” (457mm).

Certifications

All sizes shall be design certified by the Canadian Standards Association to ANSI Z83.8 and CSA 2.6 for commercial/industrial installation.

Manufacturer must have a minimum of 50 years experience in the manufacture of gas fired unit heaters.

Sample Specifications
Model UDAP

GAS-FIRED, POWER VENTED UNIT HEATERS

Provide (82%, 83%) high-efficiency, power vented, gas-fired unit heaters manufactured as Reznor® brand units designed for use in building areas where higher reliability is required and venting is either vertical or horizontal.

Fuel

Each of the 14 sizes in the Model UDAP series shall be equipped for use with (natural) (propane) gas. Gas connection shall be external to the cabinet.

Heat Exchanger

The heater shall be equipped with a multi-cell, 4 pass serpentine style steel heat exchanger. Heat exchanger tubes shall be press fabricated of (titanium stabilized, corrosion resistant aluminized steel) (409 stainless steel) (316 stainless steel). All heat exchangers shall be fabricated with no welding or brazing, only tool pressed mechanical joints. All heat exchanger cells shall be designed with an aerodynamic cross section to provide maximum airflow.

Burner

The units shall incorporate a single, one piece burner assembly with a single orifice. The burner shall have a continuous wound close pressed stainless steel ribbon separating the flame from the burner interior. All units shall have a single venturi tube and orifice supplying fuel to a one-piece burner housing. Each heat exchanger cell shall use balanced draft induction to maintain optimum flame control.

Controls

Controls shall include a (single-stage) (two-stage) gas valve; direct spark multi-try ignition with electronic flame supervision with timed lockout integrally controlled via a printed circuit control board. The control board shall also incorporate diagnostic lights, DIP switches for fan overrun settings, and a relay for fan only operation. All units shall be equipped with a safety limit switch.

All controls shall be enclosed in the unit housing to protect them from accidental damage that could be caused by factors in the building that would adversely affect external controls.

Combustion Air and Venting

The unit shall have a factory-installed power venter device to draw combustion air through an inlet in the rear of the cabinet.

The combustion air/venting system shall include a vibration isolated power venter motor and wheel assembly and a combustion air pressure switch. Unit Sizes 30-125 shall include a flame rollout switch. (The unit shall be equipped with an approved common vent option to allow venting with another gravity vented Category I gas appliance).

(A vent cap shall be available.)

REZNOR®

Sample Specifications
Model UDAP (cont'd)

Electrical

Operation shall be controlled by an integrated circuit board that includes LED diagnostic indicator lights. Supply voltage connections are made at the circuit board. 24-volt control connections shall be made on an externally mounted terminal strip with connections (W1, W2, R, and G). All internal wiring, both line and control voltages, shall be terminated by insulated terminal connectors to minimize shock hazard during service.

Each unit shall be equipped for use with 115/1 volt power supply. (Stepdown transformers shall be available to be field installed for use with (208) (230) (460) volt power supply.)

Cabinet

The cabinet shall be low profile with a pre-coat or powdercoat RAL 1001 white paint finish. Finish shall be a minimum 80 gloss on G30 galvanized steel. The cabinet shall be constructed so that screws are not visible from the bottom, front, or sides, except for service panel and accessories. Unit construction shall incorporate a beveled front corner on control side for additional cabinet rigidity. All units shall be manufactured with a tooled drawn supply air orifice on the rear panel to reduce fan inlet noise.

The unit shall be designed for ceiling suspension featuring 3/8”-16 female threads (hanger kits for 1” pipe) at both 2-point and 4-point locations with no additional adapter kits. (Hanger kit for ceiling mounting shall be available for Sizes 30-125.)

The cabinet shall be equipped with RAL 3005 burgundy painted, roll-formed horizontal louvers. Louvers shall be spring held and adjustable for directing airflow. (Vertical louvers) (downturn nozzles) (downturn nozzles with vertical louvers) shall be available.

The cabinet shall be equipped with a full safety fan guard with no more than ½ inch grill spacing on Sizes 30-125 or no more than 1 inch on Sizes 150-400. The (open dripproof) (enclosed) motor and fan assembly shall be resiliently mounted to the cabinet to reduce vibration and noise.

The unit shall be designed with a full opening service access panel complete with screw closure attachment and lifting handle for removal. All components in the gas train, all standard electrical controls, and the power venter shall be within the service compartment.

Minimum top clearance from combustibles shall be 1” for Sizes 30-125 and 4” for Sizes 150-400. Minimum bottom clearance from combustibles shall be 1” for all sizes. Minimum clearance from combustibles on non-service side shall be 1” for Sizes 30-125 and 2” for Sizes 150-400.

Certifications

Unit(s) shall be design certified by the Canadian Standards Association to ANSI Z83.8b and CSA 2.6b for commercial/industrial installation.

(Model sizes 30, 45, 60, 75, 100 and 125 MBH shall be certified to CSA International Requirement 10-96 - U.S., CR96-0005 - Canada for use in attached residential garage.

Manufacturer must have a minimum of 50 years experience in the manufacture of gas fired unit heaters.

Sample Specifications
Model UDBP

GAS-FIRED, POWER VENTED UNIT HEATERS

Provide (82%, 83%) high-efficiency, power vented, gas-fired unit heaters manufactured as Reznor® brand units designed for use in building areas where higher reliability is required and venting is either vertical or horizontal.

Fuel

Each of the 14 sizes in the Model UDBP series shall be equipped for use with (natural) (propane) gas. Gas connection shall be external to the cabinet.

Heat Exchanger

The heater shall be equipped with a multi-cell, 4 pass serpentine style steel heat exchanger. Heat exchanger tubes shall be press fabricated of (titanium stabilized, corrosion resistant aluminized steel) (409 stainless steel) (316 stainless steel). All heat exchangers shall be fabricated with no welding or brazing, only tool pressed mechanical joints. All heat exchanger cells shall be designed with an aerodynamic cross section to provide maximum airflow.

Burner

The units shall incorporate a single, one piece burner assembly with a single orifice. The burner shall have a continuous wound close pressed stainless steel ribbon separating the flame from the burner interior. All units shall have a single venturi tube and orifice supplying fuel to a one-piece burner housing. Each heat exchanger cell shall use balanced draft induction to maintain optimum flame control.

Controls

Controls shall include a (single-stage) (two-stage) gas valve; direct spark multi-try ignition with electronic flame supervision with timed lockout integrally controlled via a printed circuit control board. The control board shall also incorporate diagnostic lights, DIP switches for blower overrun settings, and a relay (definite purpose 3 pole contactor) for blower only operation. All open (TEFC) blower motors shall have automatic thermal overload protection or be equipped with a factory installed motor starter with adjustable thermal overloads. All units shall be equipped with a safety limit switch.

All controls shall be enclosed in the sealed control compartment to protect them from accidental damage, dust, and atmospheric corrosion.

REZNOR®

Sample Specifications
Model UDBP (cont'd)

Combustion Air and Venting

The unit shall have a factory-installed power venter device to draw combustion air through an inlet in the rear of the cabinet.

The combustion air/venting system shall include a vibration isolated power venter motor and wheel assembly and a combustion air pressure switch.

(An approved vent cap shall be available.)

Electrical

Operation shall be controlled by an integrated circuit board that includes LED diagnostic indicator lights. Supply voltage connections are made at the circuit board. 24-volt control connections shall be made on an externally mounted terminal strip with connections W1, W2, R, and G. All internal wiring, both line and control voltages, shall be terminated by insulated terminal connectors to minimize shock hazard during service.

Units shall be equipped with a 115V power supply (Stepdown transformers shall be available to be field installed for use with a (208) (230) (460) volt power supply.)

Blower

Size 30,000-125,000 BTUH units shall be equipped with a centrifugal blower with direct drive from an open dripproof motor with internal overloads. Size 30,000 and 45,000 BTUH units must be able to handle .5" w.c. of external static pressure. Size 60,000-125,000 BTUH units must be able to handle .75" w.c. of external static pressure. (Size 30,000-125,000 BTUH units may be equipped with a blower inlet guard.)

Size 150,000-400,000 BTUH units shall be equipped with a centrifugal blower and adjustable belt drive and an (open dripproof) (totally enclosed) blower motor with internal overloads. Size 150,000-400,000 BTUH units must be able to overcome .5" w.c. of external static pressure. (Size 150,000-400,000 BTUH units may be equipped with an OSHA-type belt guard and blower inlet guard.)

Cabinet

The cabinet shall be low profile with a pre-coat or powdercoat RAL 1001 white paint finish. Finish shall be a minimum 80 gloss on G30 galvanized steel. The heat exchanger/control compartment cabinet shall be constructed so that screws are not visible from the bottom, front, or sides, except for service panel and accessories. Cabinet shall have a beveled front corner on the control side for additional cabinet rigidity.

The unit shall be designed for ceiling suspension featuring 3/8"-16 female threads (hanger kits for 1" pipe) at 4-point locations.

The cabinet shall be equipped with RAL 3005 burgundy painted, roll-formed horizontal louvers (duct flange). Louvers shall be spring held and adjustable for directing airflow. (Vertical louvers) (downturn nozzles) (downturn nozzles with vertical louvers) shall be available.

The unit shall be designed with a full opening service access panel complete with captive screw closure attachment and lifting handle for removal. All components in the gas train, all standard electrical controls, and the power venter shall be within the service compartment.

Minimum **top** clearance from combustibles shall be 6" (152mm) for Size 30,000-125,000 BTUH units and 14" (356mm) for Size 150,000-400,000 BTUH units. Minimum **bottom** clearance from combustibles shall be 1" (25mm) for all size units. Minimum clearance on **access side** shall be 18" (457mm) for all sizes. Minimum clearance on **non-access side** shall be 24" (610mm) for all sizes. Minimum **rear** clearance for all sizes is 18" (457mm).

Certifications

All sizes shall be design certified by the Canadian Standards Association to ANSI Z83.8 and CSA 2.6 for commercial/industrial installation.

Manufacturer must have a minimum of 50 years experience in the manufacture of gas fired unit heaters.

Sample Specifications
Model F

GAS-FIRED, POWER VENTED UNIT HEATERS

Provide gravity-vented, high-efficiency, gas-fired unit heaters manufactured as Reznor® brand units. Units are designed to take combustion air from the indoor space and vent to the outdoors.

Model F - Gas-fired, propeller fan, gravity-vented model

Fuel

Each Model F series unit shall be equipped for use with (natural) (propane) gas and (120/1/60) (208/1/60) (230/1/60) (220-240/1/50) volt power supply.

Heat Exchanger

The heat exchanger shall be aluminized (E-3 stainless) (409 stainless) steel. Die-formed burners shall be of aluminized steel and include flared ports and a stainless steel insert. The units shall be designed to provide 80% thermal efficiency.

Controls

Controls include a 24-volt control transformer; single-stage (two-stage) gas control system; an intermittent spark pilot with electronic flame supervision (intermittent spark pilot with electronic flame subversion and timed lockout); fan and limit safety controls; an open, drip-proof (totally enclosed) fan motor with internal overloads; and a blocked vent switch system.

Cabinet

The cabinet is equipped with a full safety fan guard and horizontal (vertical) louvers (downturn nozzles) for directing airflow. The unit is arranged for ceiling suspension with 2-point (4-point) threaded hanger connections (hanger kits).

Certifications

Model F unit heaters are design certified to ANSI and CAN/CGA Standards by the Canadian Standards Association for installation in the United States and Canada.

REZNOR®

Sample Specifications

Model B

GAS-FIRED, POWER VENTED UNIT HEATERS

Provide gravity-vented, high-efficiency, gas-fired unit heaters manufactured as Reznor® brand units. Units are designed to take combustion air from the indoor space and vent to the outdoors.

Model B - Gas-fired, blower, gravity-vented model

Fuel

Each Model B series unit shall be equipped for use with (natural) (propane) gas and (120/1) (230/1) (460/3) (575/3) volt power supply.

Heat Exchanger

The heat exchanger shall be aluminized (E-3 stainless) (409 stainless) steel. Die-formed burners shall be of aluminized steel and include flared ports and a stainless steel insert. The units shall be designed to provide 80% thermal efficiency.

Controls

Controls include a 24-volt control transformer; single-stage (two-stage) gas control system; an intermittent spark pilot with electronic flame supervision (intermittent spark pilot with electronic flame supervision and timed lockout); fan and limit safety controls; a centrifugal blower with (direct) (adjustable belt) drive; and an (open, drip-proof) (totally enclosed) blower motor with internal overloads.

Blower

Each unit must be able to overcome .25" w.c. (.5" w.c.) of external static pressure (and may be equipped with an OSHA-type belt and/or blower inlet guard).

Cabinet

The cabinet is equipped with horizontal (vertical) louvers (downturn nozzles) for directing airflow or with a duct flange. The unit is arranged for ceiling suspension with 4-point threaded hanger connections (hanger kits).

Certifications

Model B unit heaters are design certified to ANSI and CAN/CGA Standards by the Canadian Standards Association for installation in the United States and Canada.

Sample Specifications

Model OH

OIL-FIRED, POWER VENTED UNIT HEATERS

Provide oil-fired unit heaters manufactured as Reznor® brand units. The units shall be completely packaged and arranged for ceiling suspension with four-point threaded suspension sockets. They shall be equipped for use with #2 oil using a pressure-atomizing gun-type power burner, a single-stage fuel pump, and an electric spark ignition with an automatic cad-cell flame safety system with manual reset.

Heat Exchanger

Heaters are to be equipped with a heavy, 13 gauge combustion chamber and low stress 18 gauge steel heat exchanger. All sizes shall include flame observation port, CO_2 sample port, and service and cleanout access panels.

Controls

Each unit is to be equipped with a combination fan and limit switch with manual fan switch for safety and comfort control. The units are to be used with 115 volt supply and have a 24-volt control transformer.

Blower

Model OH heaters are provided with a propeller fan and a totally enclosed fan motor with internal overloads. Each unit is to be equipped with a burner service tray, an OSHA-type fan guard, and horizontal (vertical) air directional louvers.

Certifications

Model OH unit heaters are design certified by Underwriters Laboratories (UL) or certified by the Canadian Standards Association (CSA).

Sample Specifications

Model LDAP

INDIRECT-FIRED, DOWNFLOW HEATERS

Provide packaged indoor heating units as Reznor® brand equipment. The units shall be Model LDAP (400, 800, 1200) arranged for ceiling suspension with vertical (down) air discharge. Each unit must have a single point wall or roof penetration for exhaust of flue gases. Units shall be rated for 83% thermal efficiency.

Cabinet

The cabinet shall be in one piece. Painted and ready to be suspended from ceiling by four suspension points (or wall mounted), designed for ease of installation with an external 24-volt terminal strip and gas line connection.

Discharge Air Options

Air supply will be directed by means of (2-way down discharge louvers) (4-way down discharge louvers) (30° bend multi-positional discharge nozzles with 2-way louvers) (60° bend multi-positional discharge nozzles with 2-way discharge louvers) (30° bend multi-positional discharge nozzles with 4-way down discharge louvers).

Fan and Air Controls

The units shall include a propeller fan for each heat section with 3-speed 208/230 Volt open fan motor(s) with internal overload protection, pressure switch to verify venter flow, resiliently isolated venter motor, resiliently isolated axial fan and motor assembly, a high temperature limit control, a destratification fan control, and a built-in disconnect switch. Operation shall be controlled through an integrated circuit board. The circuit board monitors heater operation and has LED diagnostic indicator lights to identify abnormalities in control functions. Unit shall have a single-stage (2-stage on size 400) gas valve field adjustable for up to 10,000 ft/3,045 M elevation (high altitude pressure switch kit for units installed above 6,000 ft/1,830 M).

Fuel

Units shall be equipped for use with (natural gas) (propane), (208/1) (230/1) supply voltage, multi-try direct ignition with timed lockout.

Heat Exchanger

Each heat section shall have the Reznor TCORE2® heat exchanger and single burner combustion system. The heat exchanger shall be of (aluminized steel) (409 stainless steel). The furnace shall be equipped with all required safety elements.

Options

The following shall be available (manual shutoff valve) (1" pipe coupling hanger kit) (24 volt thermostat) (multiple heater control) (thermostat guard) (vent cap).

Certifications

Heaters shall be certified by the ETL Testing Agency for commercial and industrial applications.

REZNOR® PRODUCT LIMITED WARRANTY

Thomas & Betts Corporation warrants to the original owner-user that this Reznor product will be free from defects in material or workmanship. This warranty is limited to twelve (12) months from the date of original installation, whether or not actual use begins on that date, or eighteen (18) months from date of shipment by Thomas & Betts Corporation, whichever occurs first.

EXTENDED WARRANTY

Models UEAS, UDAP, UDAS, UDBP, and UDBS — Extended nine (9)-year, non-prorated warranty on the heat exchanger, burners, and flue collection box assembly. Extended four (4)-year, non-prorated warranty on all electrical and mechanical operating components (with the exception of blower belts on Models UDBP and UDBS).

Models F and B — Extended nine (9)-year, non-prorated warranty on the heat exchanger, burners, draft hood, and flue baffle assembly. Extended four (4)-year, non-prorated warranty on all electrical and mechanical operating components (with the exception of blower belts on Model B).

Models OH — Extended four (4)-year, non-prorated warranty on the heat exchanger and combustion chamber.

Application NOTE: Extended four (4)-year warranty on electrical and mechanical operating components excludes any Reznor® HVAC equipment installed in a corrosive or highly humid atmosphere such as a greenhouse.

LIMITATIONS AND EXCLUSIONS

Thomas & Betts Corporation's obligations under this warranty and the sole remedy for its breach are limited to repair, at its manufacturing facility, of any part or parts of its Reznor products which prove to be defective; or, in its sole discretion, replacement of such products. All returns of defective parts or products must include the product model number and serial number, and must be made through an authorized Reznor distributor or arranged through Reznor Customer Service. Authorized returns must be shipped prepaid. Repaired or replacement parts will be shipped by Thomas & Betts F.O.B. shipping point.

1. The warranty provided herein does not cover charges for labor or other costs incurred in the troubleshooting, repair, removal, installation, service or handling of parts or complete products.
2. All claims under the warranty provided herein must be made within ninety (90) days from the date of discovery of the defect. Failure to notify Thomas & Betts of a warranted defect within ninety (90) days of its discovery voids Thomas & Betts's obligations hereunder.
3. The warranty provided herein shall be void and of no effect in the event that (a) the product has been operated outside its designed output capacity (heating, cooling, airflow); (b) the product has been subjected to misuse, neglect, accident, improper or inadequate maintenance, corrosive environments, environments containing airborne contaminants (silicone, aluminum oxide, etc.), or excessive thermal shock; (c) unauthorized modifications are made to the product; (d) the product is not installed or operated in compliance with the manufacturer's printed instructions; (e) the product is not installed and operated in compliance with applicable building, mechanical, plumbing and electrical codes; or (f) the serial number of the product has been altered, defaced or removed.
4. The warranty provided herein is for repair or replacement only. Thomas & Betts Corporation shall not be liable for any loss, cost, damage, or expense of any kind arising out of a breach of the warranty. Further, Thomas & Betts Corporation shall not be liable for any incidental, consequential, exemplary, special, or punitive damages, nor for any loss of revenue, profit or use, arising out of a breach of this warranty or in connection with the sale, maintenance, use, operation or repair of any Reznor product. In no event will Thomas & Betts be liable for any amount greater than the purchase price of a defective product. The disclaimers of liability included in this paragraph 4 shall remain in effect and shall continue to be enforceable in the event that any remedy herein shall fail of its essential purpose.
5. THIS WARRANTY IS THE SOLE AND EXCLUSIVE WARRANTY FOR REZNOR PRODUCTS, AND IS IN LIEU OF ALL OTHER EXPRESS AND IMPLIED WARRANTIES. THOMAS & BETTS CORPORATION SPECIFICALLY DISCLAIMS ALL OTHER EXPRESS AND IMPLIED WARRANTIES, INCLUDING, BUT NOT LIMITED TO, ALL IMPLIED WARRANTIES OF MERCHANTABILITY AND FITNESS FOR A PARTICULAR PURPOSE. No person or entity is authorized to bind Thomas & Betts Corporation to any other warranty, obligation or liability for any Reznor product. Installation, operation or use of the Reznor product for which this warranty is issued shall constitute acceptance of the terms hereof.

Reznor® is your global source for heating, ventilating and air conditioning equipment.

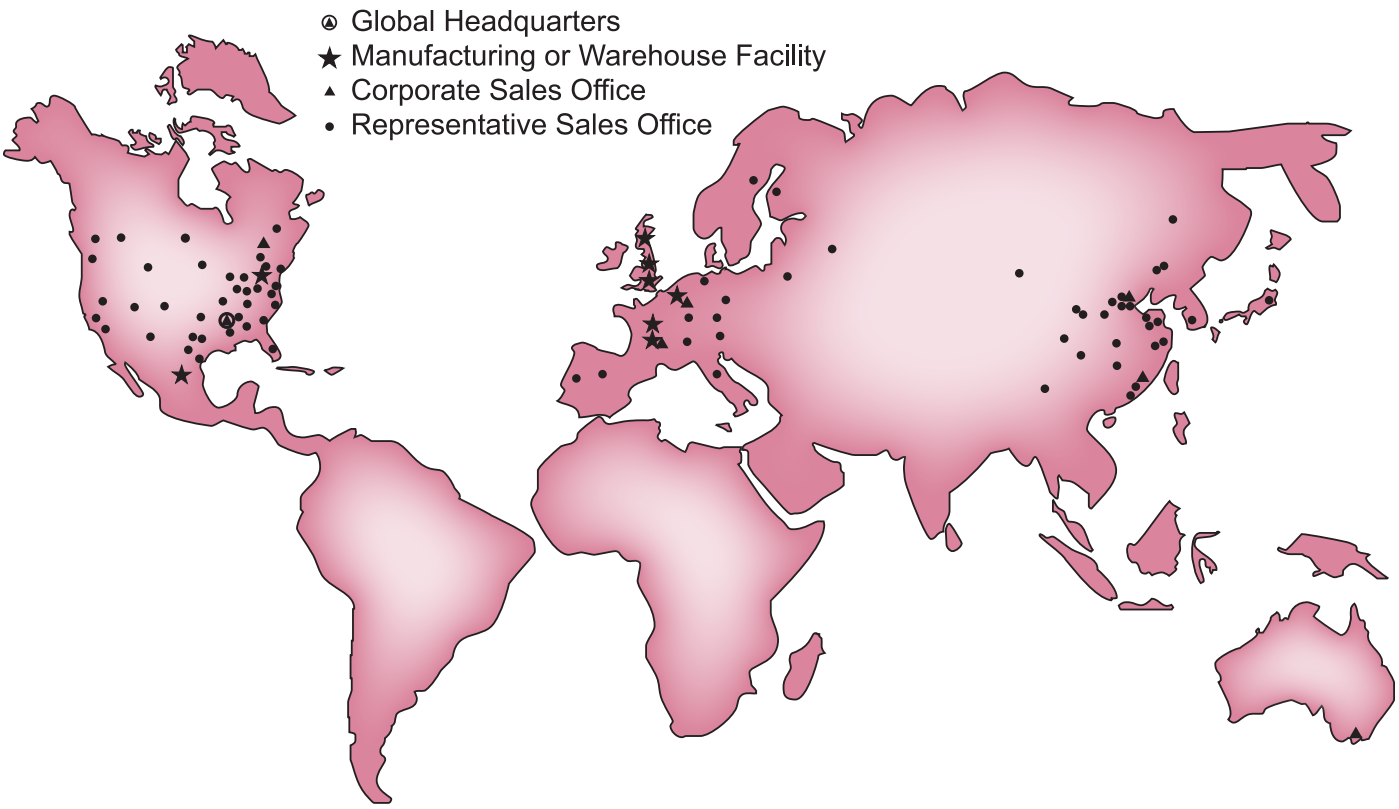

REZNOR®

**For more information on Reznor HVAC Equipment,
go to www.RezSpec.com or contact your local Reznor Representative
by calling 800-695-1901.**

©2012 Thomas & Betts Corporation, All rights reserved.
Reznor® is registered in the United States and other countries.
0812 POD OG Form C-UH
Printed in the U.S.A.
(Version H.8)

Thomas&Betts